WE PRODUCE BOAT JEWELRY

2017

MarineTown®

CATEGORY

01 Preface

About Marine Town
General Policy - U.S. Market
General Policy - Global Market

11 Cabinet Hardware & Locks

Slam Latch
Compression Latch
Privacy Door Latch
Transom Latch
Bi-Fold Door Latch
Drawer Latch
Slide Latch
Barrel Bolt
Cam Over Latch & Hasp
Sliding Door Stop
Door Holder
Plunger
Lift Handle

41 Antenna Mounts

42 Plumbing

Faucet
Water Outlet / Inlet
Thru Hull
Scupper
Motor Well Drain
Deck Drain
Hooded Drain
Stamped Scoop Head
Drain Plug

58 Engine System

Exhaust Thru Hull
Deck Fill
Tank Vent

63 Deck Hardware

Cleat
Bow Eye
Stern Eye
Flag Pole & Socket
Grab Handle
Foldaway Pad Eye
Deck Plate

73 Anchor & Mooring Equipment

Anchor & Roller
Anchor Accessory
Chain Stopper
Fender Hook
Mooring Snubber
Mooring Hook
Folding Step

80 Fishing

Rod Holder
Trim Ring
Fishing Rod Storage Cover

CATEGORY

82 Interior

Coat Hook
Folding Drink Holder

83 Seating & Bimini Hardware

Roll Back Bolster Hinge
Arm Rest Bracket
Seat Back Support
Bimini Top Hardware
Tie Down

89 Watersports

Ski Tow Cleat
Ski Tow Post

91 Sailboat Hardware

Stainless Steel Block
Nylon Pulley

92 Hinge

Friction Hinge
Seam Friction Hinge
Seam Friction Covered Hinge
Butterfly Hinge
Covered Hinge
Cast Hinge
Stamped Hinge

ABOUT MARINE TOWN

Our founder Richard Tung, who established Marine Town in Taipei, Taiwan in 1988, has led our company to a well-trained, R&D oriented enterprise.

In 2015 Marine Town's U.S. customer service and distribution warehouse was relocated to Crystal River, FL in order to better serve our customers' needs for more rapid delivery times throughout the eastern seaboard.

With its core value being "Innovation, Quality and Service", Marine Town has introduced many patented, revolutionary, state-of-the-art products to the marine industry and is dedicated to providing our valued customers with the best of product quality and exceptional customer service.

With our own facilities in Guangzhou, China, we constantly strive to improve the technology used in production to ensure the highest of quality. Our complete, integrated production lines include investment casting, stamping, injection molding and rubber molding.

Marine Town aims to continue providing the marine industry with cutting-edge products, superior customer service and the proper inventory levels required to meet the needs of customers.

We look forward to serving your product needs and building a valued long-term working partnership.

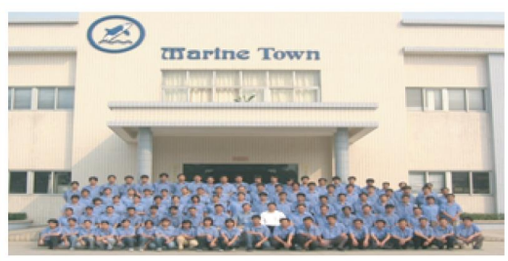

GENERAL POLICY – U.S. MARKET

CONTACT US

- Orders • Accounting • Delivery:

2061 NW US Highway 19,
Crystal River, FL 34428

T 352-564-1150 F 352-564-1156
E info@marinetown.com

ORDERS

- Price Term : FOB Crystal River, Florida

- Prices:

All pricing is subject to change. Customers will be notified of changes in pricing one month prior to the effective date.

- Payment Term:

All orders are subject to our credit approval. With approved credit, term is Net 30 Days from shipment arrival date. Payment can be made either by check, wire transfer or credit card.

- Late Charge:

All invoices not paid by Due Date will be subject to late charges in the amount of 1% per month. No shipments will be made on past due accounts until payments are settled.

- Orders Require Down Payment:

For items that Marine Town does not stock regularly or are in need of customization, 30% down payment will be required.

- Custom Orders:

We welcome you to develop custom projects with us! An overview of our process and requirements for custom projects has been provided below for your reference. A 50% down payment is required in order to open custom tooling. This balance will be due prior to delivery of a tooling sample.

Drawing → Prototype → 50% Down Payment of Tooling Cost → Tooling → 50% Balance of Tooling Cost → Tooling Sample → 30% Down Payment for Order → Mass Production

- Minimum Order:

No minimum order quantities are required unless otherwise specified when a quote is offered and less-than-standard-pack quantities are allowed.

GENERAL POLICY – U.S. MARKET

- Drop Ship Order:
  A handling fee of US$50 will be charged for every drop ship order.

- International Air / Express Fee
  Marine Town shall not be liable for the freight cost of international air/express shipments incurred as a result of new or increased demand for product without advanced notice.

LIMITED WARRANTY

Marine Town Inc. warrants to the original purchaser that all products will be free from defect of materials or workmanship under normal use and service for a period of one (1) year from the date of original purchase.

During the limited warranty period, defective products will be repaired or replaced with a like product (at Marine Town's discretion) without charge to the original purchaser, when returned parts are shipped prepaid and accompanied by a Return Merchandise Authorization to:

Marine Town Inc.
2061 NW US Highway 19, Crystal River, FL 34428
TEL: 352-564-1150

This warranty is void if the product has been damaged by accident, abuse, misuse or neglect, improper installation or service, or unauthorized modifications, misapplication or other use not arising out of defects in material and workmanship. It is the responsibility of the purchaser to evaluate Marine Town's products for fit and application for their specific needs.

Marine Town shall not be responsible or liable for incidental, consequential costs, expenses of removal, labor costs associated with replacement/repair of installation or products, and damages incurred by the original purchaser, cooperation, or personal injury.

RETURN POLICY

All returned product must have a Return Merchandise Authorization (RMA) number issued by Marine Town. Special order products will only be considered for return in the event of product failure. Products returned with cosmetic or functional damages (including, but not limited to, surface or installation damages) resulting from improper use by the customer will not be issued a credit.

GENERAL POLICY – U.S. MARKET

- The RMA# must be clearly marked on the outside of the box.
- A Return Merchandise Authorization is not an approval or guarantee of credit.
- Proof of purchase is required for all RMA submissions.
- **Non-warranty return:**
  - Will be subject to a 15% restocking fee assuming the product is returned in a saleable condition.
  - Must be requested within 30 days of the original receipt date and accompanied by the proof of purchase.
  - Must be returned in “like-new” or “saleable” condition with original package (at Marine Town’s discretion).

PRODUCT INFORMATION

- Products in this catalog are primarily stainless steel 316 in exception to tubing, plates and accessories such as pins, screws, and washers. Material may vary due to differential demand or function.

- Each product will have a size tolerance under casting process or secondary machining such as polishing. Specification differences from the catalog under these circumstances will be acceptable.

- Marine Town reserves the right to adjust specifications in order to improve the product function without prior notification to customers.

- Marine Town advises customers against the use of cleaning solutions containing harsh chemicals when caring for stainless steel products as these are known to increase the potential for rust and corrosion. Damage to products resulting from such will not be covered under the Marine Town warranty policy.

GENERAL POLICY - GLOBAL MARKET

CONTACT US

21F-2, No.33, Sec. 1, Minsheng Rd.,
Banqiao Dist., New Taipei City 220, Taiwan

T 886-2-29579880 F 886-2-29579882
E info@marinetown.com.tw

ORDERS

- Document Fee
  - Certificate of Origin from Taiwan: US$100
  - Certificate of Origin from China/CHAFTA/Form S: US$100
  - Form A from China: US$160

- Handling cost for aired/expressed magnetic products

  For aviation safety concerns, no magnetism can be sensed for parcels carried by aircraft. To isolate magnetism, special packaging is required and therefore handling fee US$30 will be charged.

  It's important for the customers to understand that even if special packaging will be done, inspection may still be requested by the authority. And any related fees will be at the customer's own expense.

- Handling cost for Air shipment
  - FOB Taiwan: US$150
  - FOB China: US$200

  (Fees are subject to adjustment according to the real market situation.)

LIMITED WARRANTY

Marine Town Inc. warrants to the original purchaser that all products will be free from defect of materials or workmanship under normal use and service for a period of one (1) year from the date of original purchase.

The warranty is void if the product has been damaged by accident, abuse, misuse or neglect, improper installation or service, or unauthorized modifications, misapplication or other use not arising out of defects in material and workmanship. It is the responsibility of the purchaser to evaluate Marine Town's products for fit and application for their specific needs.

GENERAL POLICY - GLOBAL MARKET

Marine Town shall not be responsible or liable for incidental, consequential costs, expenses of removal, labor costs associated with replacement/repair of installation or products, and damages incurred by the original purchaser, cooperation, or personal injury.

For efficient compensation and quality improvement, the following information will be required to clarify and approve the claim.

- Invoice number
- Defective quantity
- Photos or videos of the claimed item to show the problem.
- Return of one piece of the defective product to Marine Town may be required for evaluation.

The claim may not be accepted if the defective product is scrapped prior to Marine Town's approval.

RETURN POLICY

Replacement product will be shipped with the customers' next sea shipment. Requests for delivery of replacement product via express or air will be at the customer's expense. If replacement stock is not available, Marine Town will issue a credit note which can be deducted from the customer's next order.

PRODUCT INFORMATION

- This represents Marine Town's in-house products which go through passivation, salt spray test, and rigid inspections to assure quality and reliability before delivery.

- Products in this catalog are primarily stainless steel 316 in exception to tubing, plates, and accessories such as pins, screws, and washers. Material may vary due to differential demand or function.

- Each product will have a size tolerance under casting process or secondary machining such as polishing. Specification differences from the catalog under these circumstances will be acceptable.

- Marine Town reserves the right to adjust specifications in order to improve product function without prior notification to customers.

GENERAL POLICY - GLOBAL MARKET

- Marine Town advises customers against the use of cleaning solutions containing harsh chemicals when caring for stainless steel products as these are known to increase the potential for rust and corrosion. Damage to products resulting from such will not be covered under the Marine Town warranty policy.

PACKAGE OPTIONS

Head Card

Package No.
H9026293

P.P. Bag

Package No.
P9011201

Clamshell

Package No.
C0407121

Marine Town retail packaging is now available upon request. A variety of packaging options are provided for diverse products.

Please contact us for specific packaging if required. A packaging code, as seen below, will be added to the bulk no. on your sales confirmatioin. Product descriptions and barcodes can also be customized upon request.

For examples:

Code	Packaging Method	Package No.
H	Head Card	H + Bulk No.
P	P.P. Bag	P + Bulk No.
C	Clamshell	C + Bulk No.

SLAM LATCH 1-3/4"

Self-closing function.
Anti-rattle design.
Adjustable slide.

COMPRESSION LATCH 2"

Contemporary design.
Ideal for gasketed hatches.
Watertight protection.

COMPRESSION LATCH 2-1/2"

User-friendly handle.
Watertight protection.
Detent mechanism.

LIFT HANDLE

Hidden screw design.
Watertight protection.

GRAND SERIES - MINI SLAM LATCH 1-3/8"

Stainless Steel 316

- New smaller self-closing latch.
- Larger handle opening for comfortable grip.
- Anti-rattle design.
- Reversible backing plate for wide range of door thickness.
- Installation screws are included.
- Watertight gasket is included.
- Screw size #6.

Patented

0207851

0207802

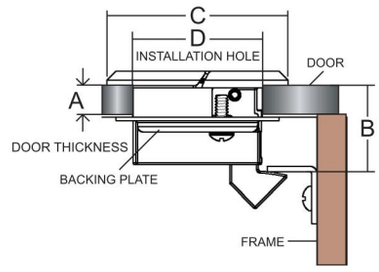

Bulk No.	Shape	Model	A mm	B mm	C mm	D mm
0207801	Round	W/O Lock	8~19(5/16"~3/4")	22(7/8")	49(1-15/16")	35(1-3/8")
0207802	Round	W/ Lock	8~19(5/16"~3/4")	22(7/8")	49(1-15/16")	35(1-3/8")
0207851	Square	W/O Lock	8~19(5/16"~3/4")	22(7/8")	49(1-15/16")	35(1-3/8")
9105511-V1	3mm(1/8") Spacer					
9707938	Universal MT Key					

GRAND SERIES - SLAM LATCH 1-3/4"

Stainless Steel 316

Video

- New smaller self-closing latch.
- Larger handle opening for comfortable grip.
- Anti-rattle design.
- Adjustable slide ensures rattle free operation.
- Reversible backing plate for wide range of door thickness.
- Installation screws are included.
- Watertight gasket is included.
- Screw size #6.

Patented

1007871

1007812

Slide adjust direction

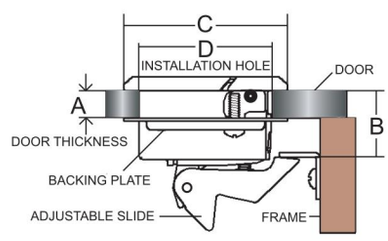

Bulk No.	Shape	Model	A mm	B mm	C mm	D mm
1007811	Round	W/O Lock	9~22(3/8"~7/8")	19~25(3/4"~1")	57(2-1/4")	45(1-3/4")
1007812	Round	W/ Lock	9~22(3/8"~7/8")	19~25(3/4"~1")	57(2-1/4")	45(1-3/4")
1007871	Square	W/O Lock	9~22(3/8"~7/8")	19~25(3/4"~1")	57(2-1/4")	45(1-3/4")
1007872	Square	W/ Lock	9~22(3/8"~7/8")	19~25(3/4"~1")	57(2-1/4")	45(1-3/4")
9305351-V1	8mm(5/16") Spacer					
1007811-V11	3mm(1/8") Spacer					

OVAL SLAM LATCH

Stainless Steel 316

- Concealed handle hinge design for modern style.
- Adjustable slide ensures rattle free operation.
- Reversible backing plate for wide range of door thickness.
- Installation screws are included.
- Screw size #6.

0107887

0107885

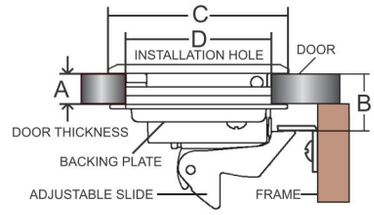

Bulk No.	Model	A mm	B mm	C mm	D mm
0107885	W/O Lock	8~22(5/16"~7/8")	19~25(3/4"~1")	62(2-7/16")	51(2")
0107887	W/ Lock	8~22(5/16"~7/8")	19~25(3/4"~1")	62(2-7/16")	51(2")

SLAM LATCH

Stainless Steel 316

- Smooth inside. Designed for light and medium weight doors.
- Comes with a 3mm spacer ring.
- 6mm and 10mm spacer rings are available upon request.
- Installation screws are included.
- Screw size #8.

9507775

9507774

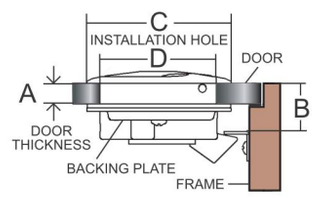

Bulk No.	Model	A mm	B mm	C mm	D mm
9507774	W/O Lock	12~22(1/2"~7/8")	25(1")	61(2-3/8")	51(2")
9507775	W/ Lock	12~22(1/2"~7/8")	25(1")	61(2-3/8")	51(2")

WATERPROOF SLAM LATCH

Stainless Steel 316

- Designed for waterproof compartment.
- Using for exterior deck lockers and live bait well.
- Comes with a 3mm spacer ring.
- 6mm and 9mm spacer rings are available upon request.
- Max. door thickness is 22mm by using longer screws.
- Screw size #8.

9221525

9221520

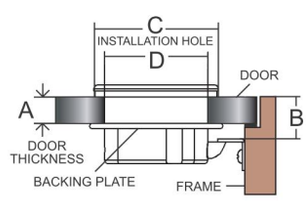

Bulk No.	Model	Housing	A mm	B mm	C mm	D mm
9221520	W/O Lock	S.S.316	10~13(3/8"~1/2")	25(1")	61(2-3/8")	51(2")
9221521	W/ Lock	S.S.316	10~13(3/8"~1/2")	25(1")	61(2-3/8")	51(2")
9221524	W/O Lock	Nylon	10~13(3/8"~1/2")	25(1")	61(2-3/8")	51(2")
9221525	W/ Lock	Nylon	10~13(3/8"~1/2")	25(1")	61(2-3/8")	51(2")

GRAND SERIES - COMPRESSION LATCH

Stainless Steel 316

- Watertight.
- Anti-rattle design.
- Larger handle opening for comfortable grip.
- Detent handle ensures positioning after a 90° turn.
- Ideal for gasketed hatches.
- Installation screws and watertight gasket are included.
- Screw size #8.

Patented

Video

0207932

1007831

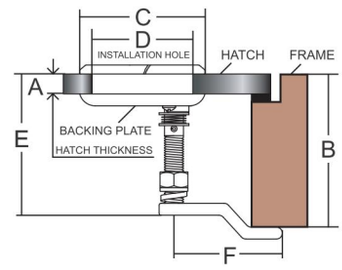

Bulk No.	Lock	A mm	B mm	C mm	D mm	E mm	F mm
1007831	W/O Lock	1~20(1/16"~13/16")	25~76(1"~3")	65(2-9/16")	51(2")	71(2-25/32")	54(2-1/8")
1007832	W/ Lock	6~20(1/4"~13/16")	25~76(1"~3")	65(2-9/16")	51(2")	71(2-25/32")	54(2-1/8")
0207931	W/O Lock	0~19(0"~3/4")	55.5~73(2-3/16"~2-7/8")	78(3-1/16")	63.5(2-1/2")	84(3-5/16")	38.5(1-1/2")
0207932	W/ Lock	4~22(3/16"~7/8")	55.5~73(2-3/16"~2-7/8")	78(3-1/16")	63.5(2-1/2")	84(3-5/16")	38.5(1-1/2")

GRAND SERIES - SQUARE COMPRESSION LATCH

Stainless Steel 316

- Watertight.
- Anti-rattle design.
- Larger handle opening for comfortable grip.
- Detent handle ensures positioning after a 90° turn.
- Ideal for gasketed hatches.
- Installation screws and watertight gasket are included.
- Screw size #8.

Patented

1007834

1007833

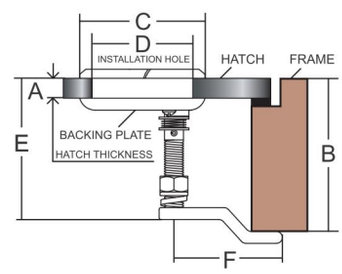

Bulk No.	Model	A mm	B mm	C mm	D mm	E mm	F mm
1007833	W/O Lock	1~20(1/16"~13/16")	25~76(1"~3")	65(2-9/16")	51(2")	71(2-25/32")	54(2-1/8")
1007834	W/ Lock	6~20(1/4"~13/16")	25~76(1"~3")	65(2-9/16")	51(2")	71(2-25/32")	54(2-1/8")

COMPRESSION D LATCH 2"

Stainless Steel 316

NEW

- Watertight.
- Handle can be nested in either latched or unlatched position.
- Ideal for gasketed hatches.
- Red dot on the handle indicates it is unlatched and allows quick access.
- Heavy duty 3/8" pawl shaft.
- Plastic washers for #8 screws are included to prevent water penetration.
- Screw size #8.

0407960

0407972-3

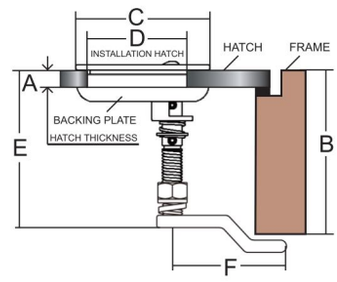

Bulk No.	Shape	Pawl	Lock	A-Min. mm	B mm	C mm	D mm	E mm	F mm
0407960	Square	9021404-2	No	4(5/32")	28~76(1-1/8"~3")	64(2-1/2")	51(2")	73(2-7/8")	54(2-1/8")
0407960-3	Square	No	No	4(5/32")	-	64(2-1/2")	51(2")	73(2-7/8")	-
0407962	Square	9021404-2	Yes	4(5/32")	28~76(1-1/8"~3")	64(2-1/2")	51(2")	73(2-7/8")	54(2-1/8")
0407962-3	Square	No	Yes	4(5/32")	-	64(2-1/2")	51(2")	73(2-7/8")	-
0407970	Round	9021404-2	No	4(5/32")	28~76(1-1/8"~3")	64(2-1/2")	51(2")	73(2-7/8")	54(2-1/8")
0407970-3	Round	No	No	4(5/32")	-	64(2-1/2")	51(2")	73(2-7/8")	-
0407972	Round	9021404-2	Yes	4(5/32")	28~76(1-1/8"~3")	64(2-1/2")	51(2")	73(2-7/8")	54(2-1/8")
0407972-3	Round	No	Yes	4(5/32")	-	64(2-1/2")	51(2")	73(2-7/8")	-

CAST LATCH PAWL

Stainless Steel 316

- Optional pawls for 2" Compression D Latch.

9021404-2

9221840

9221842

Bulk No.	A mm	B mm	C mm	D mm
9021404-2	62(2-7/16")	6(1/4")	54(2-1/8")	18(3/4")
9221840	59(2-3/8")	6(1/4")	51(2")	-
9221842	40(1-9/16")	6(1/4")	32(1-1/4")	-

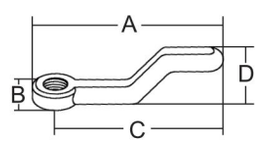

COMPRESSION D LATCH 2-1/2"

Stainless Steel 316

NEW

- Watertight.
- Handle can be nested in either latched or unlatched position.
- When handle is pressed down, pawl is raised to compress hatch, hence ideal for gasketed hatches.
- Red dot on the handle indicates it is unlatched and allows quick access.
- Heavy duty 1/2" pawl shaft.
- Plastic washers for #8 screws are included to prevent water penetration.
- Screw size #8.

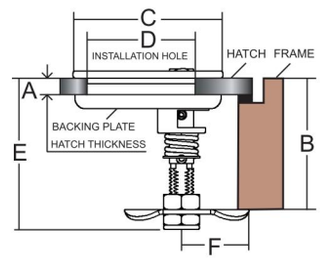

Bulk No.	Pawl	Lock	A-Min. mm	B mm	C mm	D mm	E mm	F mm
0407974	9121806	No	4(5/32")	58~69(2-1/4"~2-3/4")	78(3-1/16")	63.5(2-1/2")	79(3-1/8")	38.5(1-1/2")
0407974-3	No	No	4(5/32")	-	78(3-1/16")	63.5(2-1/2")	79(3-1/8")	-
0407976	9121806	Yes	4(5/32")	58~69(2-1/4"~2-3/4")	78(3-1/16")	63.5(2-1/2")	79(3-1/8")	38.5(1-1/2")
0407976-3	No	Yes	4(5/32")	-	78(3-1/16")	63.5(2-1/2")	79(3-1/8")	-

STAMPED LATCH PAWL

Stainless Steel 316

- Optional pawls for 63.5mm (2-1/2") Compression D Latch.

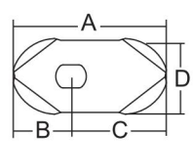

Bulk No.	A mm	B mm	C mm	D mm
9121806	64(2-1/2")	25.5(1")	38.5(1-1/2")	31(1-3/16")
9121810	92(3-5/8")	39(1-1/2")	53(2")	31(1-3/16")

CAST LATCH PAWL

Stainless Steel 316

- Optional pawls for 63.5mm (2-1/2") Compression D Latch.

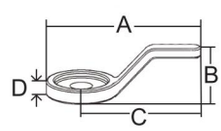

Bulk No.	A mm	B mm	C mm	D mm
9121816	83(3-1/4")	25(1")	69(2-3/4")	8(5/16")
9121820	67(2-11/16")	27(1-1/16")	53(2-1/8")	9(3/8")

CAST LATCH PAWL - ADJUSTABLE

Stainless Steel 316

- 25mm (1") adjustable slot.
- Optional pawl for 63.5mm (2-1/2") Compression D Latch.

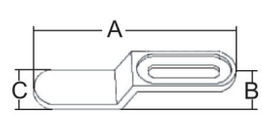

Bulk No.	A mm	B mm	C mm
9121828	105.5(4-1/8")	18(11/16")	25(1")

SQUARE "T" HANDLE LATCH - BOSS TYPE

Stainless Steel 316

- Watertight.
- Spring loaded handle for anti-rattle operation.
- Simple rectangle installation cutout.
- Hidden fasteners.
- Strike plate is included and installed under frame which helps compress hatch.
- Screw size #10.
- Not available in USA market.

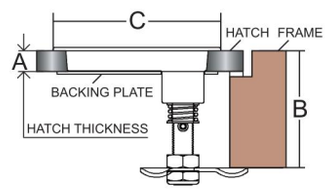

Bulk No.	Model	A mm	B mm	C mm
9021243	W/O Lock	4~15(5/32"~5/8")	55~70(2-3/16"~2-3/4")	97(3-13/16")
9121423	W/ Lock	4~15(5/32"~5/8")	55~70(2-3/16"~2-3/4")	97(3-13/16")

COMPRESSION ROUND "T" HANDLE LATCH

Stainless Steel 316

- Watertight.
- Spring loaded handle for anti-rattle operation.
- When handle is pressed down, pawl would be raised to compress hatch, hence ideal for gasketed hatches.
- Installation screws and a 7mm spacer are included.
- 9507557 is designed for aluminum boat application. It includes another 2mm spacer which can be installed under flange for waterproofing and isolating stainless steel from aluminum.
- Screw size #8.

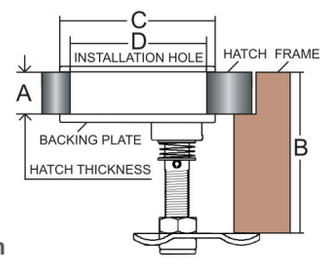

Bulk No.	Model	Finish	A mm	B mm	C mm	D mm
9507554	W/O Lock	Bright	6~16(1/4"~5/8")	58~82(2-1/4"~3-1/4")	79(3-1/8")	70(2-3/4")
9507555	W/ Lock	Bright	6~16(1/4"~5/8")	58~82(2-1/4"~3-1/4")	79(3-1/8")	70(2-3/4")
9507557	W/ Lock	Dull	4~9(3/16"~3/8")	58~82(2-1/4"~3-1/4")	79(3-1/8")	70(2-3/4")

EMERGENCY ESCAPE HANDLE

Stainless Steel 316

- Instructions engraved on handle.
- Fits all of our "T" handle latches.
- Under emergency circumstances, the "T" handle latches can be opened from the underside by simply pulling the quick-pin and rotating the release handle.

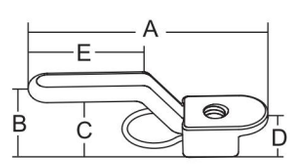

Bulk No.	A mm	B mm	C mm	D mm	E mm
9121801	116(4-9/16")	35(1-3/8")	26(1")	17(11/16")	58(2-1/4")

TOUCH PULL D HANDLE LATCH

NEW

Stainless Steel 316

- Watertight.
- Low profile.
- Larger handle for comfortable grip.
- New latching concept:
  Simply push the button and handle will pop up to unlatch.
- Swinging pawl prevents accidental damage to fiberglass frame when closing.
- Latch compresses about 6mm (1/4").
- Installation screws and watertight gasket are included.
- Longer screws are required for thicker door.
- 2" installation hole is required for 0507977.
- 2-1/2" installation hole is required for 0507979 /0507980.
- Screw size #8.

Patented

0507979

0507980

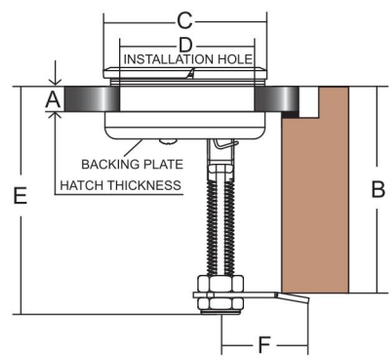

INSTRUCTION

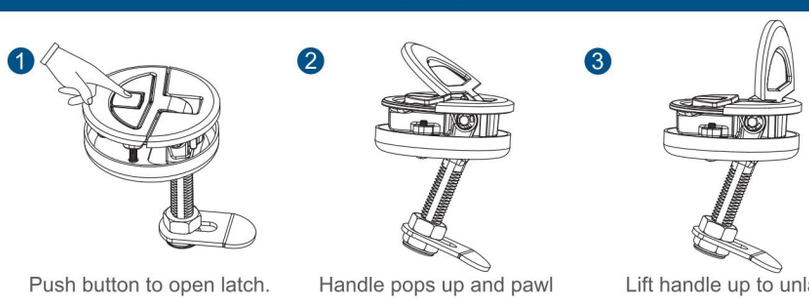

Push button to open latch.

Handle pops up and pawl goes backward.

Lift handle up to unlatch.

Bulk No.	Model	A mm	B mm	C mm	D mm	E mm	F mm
0507977	W/O Lock	7~19(1/4"~3/4")	45~66(1-3/4"~2-5/8")	65(2-9/16")	50.8(2")	80(3-3/16")	27~43(1-1/16"~1-11/16")
0507979	W/O Lock	4~13(3/16"~1/2")	45~86(1-3/4"~3-3/8")	78(3-1/16")	63.5(2-1/2")	87(3-7/16")	27~43(1-1/16"~1-11/16")
0507980	W/ Lock	4~13(3/16"~1/2")	45~86(1-3/4"~3-3/8")	78(3-1/16")	63.5(2-1/2")	87(3-7/16")	27~43(1-1/16"~1-11/16")

ADJUSTABLE HANK LATCH

Stainless Steel 316

- Flush "D" ring handle design.
- Adjustable screw on lever for easy grip adjustment.
- Easy operation by pushing button to open, and depressing handle to engage.
- Screw size #8.

9421365

9421367

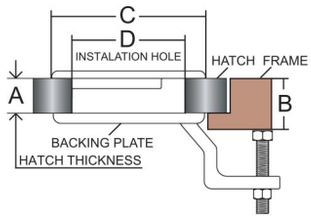

Bulk No.	Model	A mm	B mm	C mm	D mm
9421365	W/O Lock	4.5~25(3/16"~1")	22~31(7/8"~1-1/4")	61(2-3/8")	51(2")
9421367	W/ Lock	4.5~25(3/16"~1")	22~31(7/8"~1-1/4")	61(2-3/8")	51(2")

HEAD DOOR LATCH LOCKING

NEW

Stainless Steel 316 & Nylon

- Knob handle with key lock design.
- Adjustable slide fits various door gaps with 15mm (5/8") maximum engagement.
- A spacer block is usually required to be added between the door and underside of the inside latch body to acquire desired slide engagement to the door frame.
- Plate is used to cover slide cut-out.
- Fits wide range of door thickness.
- Installation screws are not included.
- Screw size for latch body: #10.
- Screw size for strike #10.

0407407

0407409

Plate

Strike

Inside	Outside

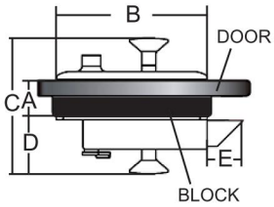

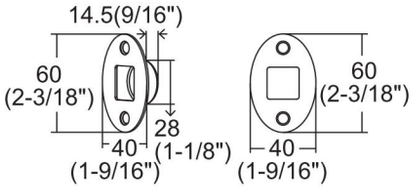

Bulk No.	A mm	B mm	C mm	D mm	E mm
0407407	19~25.4(3/4"~1")	106.5(4-3/16")	89.5(3-9/16")	41(1-5/8")	18~33(3/4"~1-5/16")
0407407-8	12.7~19(1/2"~3/4")	106.5(4-3/16")	83.5(3-5/16")	41(1-5/8")	18~33(3/4"~1-5/16")
0407407-9	31~38(1-1/4"~1-1/2")	106.5(4-3/16")	99.5(3-15/16")	41(1-5/8")	18~33(3/4"~1-5/16")
0407409	19~25.4(3/4"~1")	106.5(4-3/16")	89.5(3-9/16")	41(1-5/8")	18~33(3/4"~1-5/16")

MAG. PRIVACY DOOR LATCH

Stainless Steel 316

- Encapsulated magnet for marine use.
- Operates more quietly than conventional spring latches as the latch is held closed by magnetic force.
- Anti-rattle design.
- Can be unlocked from the outside in an emergency by using a pin.
- Screw size #8.
- Not available in USA market.

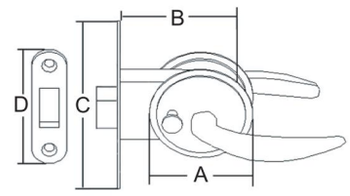

Bulk No.	A mm	B mm	C mm	D mm	Door Size
0107585	62(2-7/16")	71.5(2-3/4")	93(3-5/8")	70(2-3/4")	3/4"~1"
0107586	62(2-7/16")	71.5(2-3/4")	93(3-5/8")	70(2-3/4")	1-1/8"~1-3/8"

INSTRUCTION

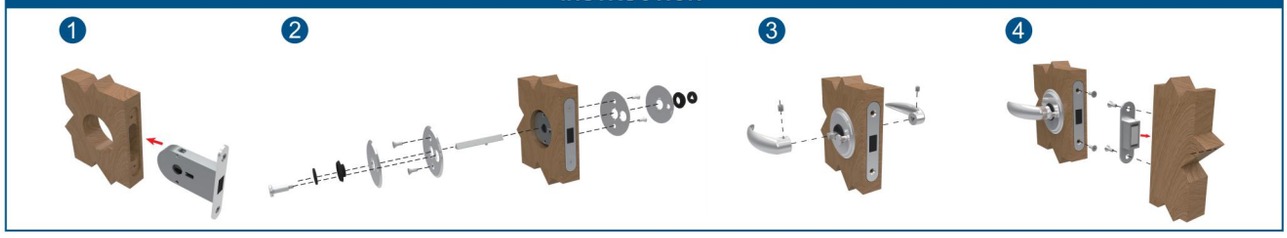

PRIVACY DOOR LATCH

NEW

Stainless Steel 316 & Nylon

- Lever handle with key lock design.
- Adjustable slide fits various door gaps to maximum 5mm (3/16").
- Two styles of strike fit different door configurations.
- 0307596 and 0307598 are sold separately.
- Screw size #8.

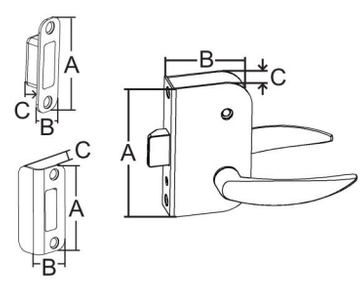

Bulk No.	Model	A mm	B mm	C mm
0307591	Left	100(4")	57.5(2-1/4")	17~22(11/16"~7/8")
0307593	Right	100(4")	57.5(2-1/4")	17~22(11/16"~7/8")
0307596	Flat Strike	62(2-7/16")	19(3/4")	13.5(1/2")
0307598	90° Strike	62(2-7/16")	25(1")	18.5(3/4")

PRIVACY DOOR COMPRESSION LATCH

NEW

Stainless Steel 316

- Watertight.
- Flush feature.
- Larger handle opening for comfortable grip.
- Detent handle ensures positioning after a 90° turn.
- Handle is up when the head is in use.
- Lever handle for opening from inside.
- Installation screws and spacer shim are included.
- Screw size #8.

Patented

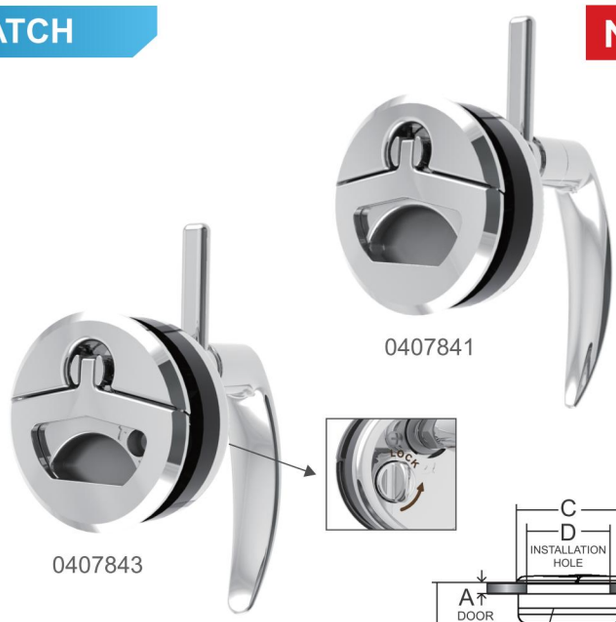

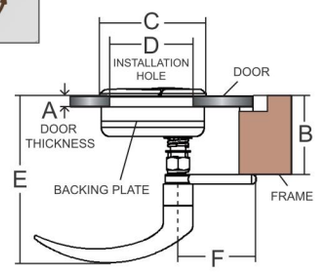

Bulk No.	Model	A mm	B mm	C mm	D mm	E mm	F mm
0407841	W/O Lock	1~20(1/16"~13/16")	49(1-15/16")	65(2-9/16")	51(2")	103(4-1/16")	48(1-7/8")
0407843	W/ Lock	6~20(1/4"~13/16")	49(1-15/16")	65(2-9/16")	51(2")	103(4-1/16")	48(1-7/8")

PRIVACY DOOR SLAM LATCH

NEW

Stainless Steel 316

- Combines our integral lock slam latch technology with inside egress capabilities.
- Comfortable inside pull handle.
- Key lock on the outside, lever lock on the inside.
- 0407790 : Interlocking strike would catch the backing plate for double engagement, which suits even curved cabin or head door.
- Screw size #8.

0407790

0407790	0407790-8
Double Engagement	Single Engagement

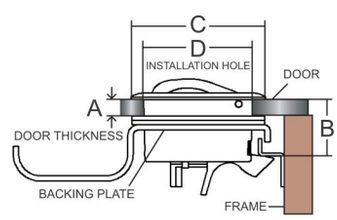

Bulk No.	Model	A mm	B mm	C mm	D mm
0407790	Double Engagement	6~11(1/4"~7/16")	26(1")	61.6(2-7/16")	51(2")
0407790-8	Single Engagement	13~19(1/2"~3/4")	26(1")	61.6(2-7/16")	51(2")

BUTTON RELEASE DOOR LATCH

Stainless Steel 316

Proud Strike

Flush Strike

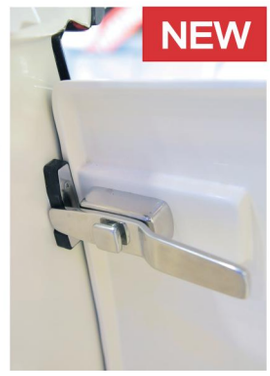

NEW

Proud Strike
used on out-swing door.

- Contemporary design.
- One hand operation.
- Door can be opened and locked by pushing the button and rotating the handle.
- Every 90° turn can secure the handle in position.
- Two strike options for out-swing or in-swing doors.
- Strike is designed to prevent handle surface from scratching.
- Works on both right and left hand transom doors.

Patented

Model	Screw Size
Latch Body 0107366,0407368	1/4"
Latch Body 0107367,0407369	#10
Proud Strike	#10
Flush Strike	#8

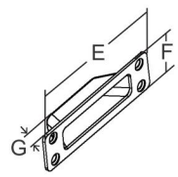

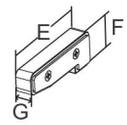

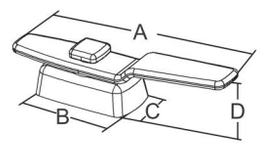

Bulk No.	Strike	A mm	B mm	C mm	D mm	E mm	F mm	G mm
0107366	Proud	166(6-1/2")	73(2-7/8")	39(1-1/2")	43(1-11/16")	71(2-13/16")	24(15/16")	13.5(17/32")
0107367	Proud	213(8-3/8")	84(3-5/16")	47(1-7/8")	53(2-1/16")	71(2-13/16")	24(15/16")	13.5(17/32")
0407368	Flush	166(6-1/2")	73(2-7/8")	39(1-1/2")	43(1-11/16")	108(4-1/4")	30(1-3/16")	20.5(13/16")
0407369	Flush	213(8-3/8")	84(3-5/16")	47(1-7/8")	53(2-1/16")	108(4-1/4")	30(1-3/16")	20.5(13/16")

BI-FOLD DOOR LATCH

NEW

Stainless Steel 316

- Clean look and easy cutout.
- Strong yet compact stainless steel construction.
- Door thicknesses:
  max. depends on screw length; min.12mm (1/2").
- Hidden screws design.
- 0319315 and 0307596 are sold separately.
- Screw size #10.

Patented

0307596
Hold-Open Strike

0307130
Hinge with Latch

0319315
Matching Hinge

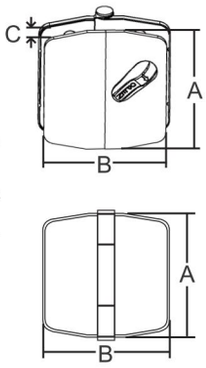

Bulk No.	A mm	B mm	C mm
0307130	75(3")	70(2-3/4")	Min.12(1/2")
0319315	78(3-1/16")	78(3-1/16")	-
0307596	62(2-7/16")	19(3/4")	13.5(1/2")

(Please refer to p.99 for details.)

CABINET DOOR / DRAWER LATCH

NEW

Stainless Steel 316 & Nylon

- Easy installation.
- Turn to open, push to latch.
- Large stainless steel, easy-grip knob.
- Customized logo on knob is available upon request.
- Ideal for using on cabinet door, drawer, glove box, tackle drawer, overhead door, etc.

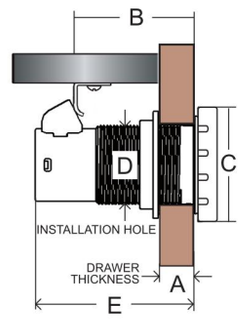

Bulk No.	A mm	B mm	C mm	D mm	E mm
0207837	5~25(3/16"~1")	36.6(1-7/16")	36(1-7/16")	25.4(1")	48(1-7/8")

SPRING LOADED SLIDE LATCH

Stainless Steel 316 & Nylon Slide

- Simple spring loaded slide latch is well-suited for popular plastic doors nowadays.
- Easy adjustable slide.
- The slide is reversible for left/right or in/out installation.
- Screw size #8.
- Not available in USA market.

9121573

9121574

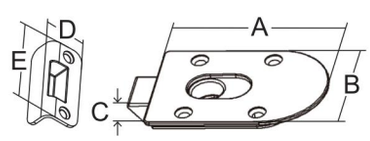

Bulk No.	Model	A mm	B mm	C mm	D mm	E mm
9121573	For Fiberglass	91(3-9/16")	56(2-3/16")	10(3/8")	21.5(7/8")	55(2-3/16")
9121574	For Wood	91(3-9/16")	56(2-3/16")	10(3/8")	23(15/16")	56(2-3/16")

SURFACE MOUNT MAG. LATCH

Stainless Steel 316

- Encapsulated magnet for marine use.
- Magnetic slide and strike ensure positive and quiet engagement.
- Slide can be spaced up to 15mm (9/16") from latch body and still actuated.
- Slide can be adjusted to desired length by loosening the knob screw.
- Screw size #8.
- Not available in USA market.

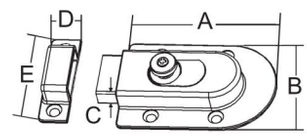

Bulk No.	A mm	B mm	C mm	D mm	E mm
9321255	91(3-9/16")	56(2-3/16")	10(3/8")	15(5/8")	56(2-3/16")

ADJUSTABLE MAG. SLIDE LATCH

Stainless Steel 316

- Designed for 12mm doors.
- Slide can be adjusted to desired length by loosening the knob screw.
- Magnetic slide and strike ensure positive and quiet engagement.
- Screw size #8.
- Not available in USA market.

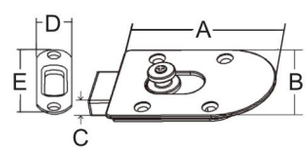

Bulk No.	A mm	B mm	C mm	D mm	E mm
9121584	91(3-9/16")	56(2-3/16")	10(3/8")	21(7/8")	70(2-3/4")

SPRING LOADED DOOR LATCH

Stainless Steel 316 & Nylon Slide

- Contemporary appearance with no visual mounting screws.
- Self-latching with nylon slide.
- The slide is reversible by removing the latch knob, reversing the slide and re-installing the knob.
- Screw size #8.
- Not available in USA market.

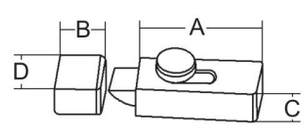

Bulk No.	A mm	B mm	C mm	D mm
9021213	73(2-7/8")	27(1-1/16")	19(3/4")	30(1-3/16")

POSITION SLIDE LATCH

NEW

Stainless Steel 316 & Nylon Body

- Slide latch designed with open and closed detent.
- Smooth low effort slide design.
- Comfortable slide grip.
- Comes with two strike options.
- Screw size for latch body #10.
- Screw size for strike #8.

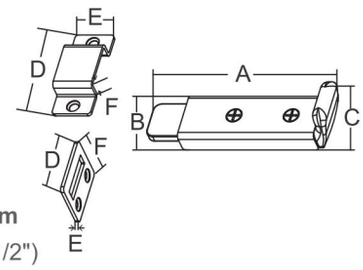

Bulk No.	Strike	A mm	B mm	C mm	D mm	E mm	F mm
0507371	Standard	123(4-7/8")	32(1-1/4")	30(1-3/16")	60(2-3/8")	25(1")	13(1/2")
0507372	Flush	123(4-7/8")	32(1-1/4")	30(1-3/16")	38(1-1/2")	2(1/16")	32(1-1/4")

DELUXE BARREL BOLT

NEW

Stainless Steel 316 Cover & Nylon Body

Video

- Deluxe appearance.
- Knob can be positioned to keep the door open.
- Spring slide assures constant engagement.
- Snap cover to conceal installation fasteners.
- Screw size #8.

Patented

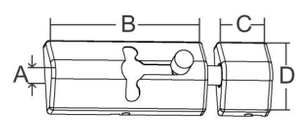

Bulk No.	Strike	A mm	B mm	C mm	D mm
0407121	Standard Strike	15(5/8")	67(2-5/8")	22(7/8")	31(1-1/4")
0407122	No Strike	15(5/8")	67(2-5/8")	-	-
0407123	Flush Strike	15(5/8")	67(2-5/8")	15(5/8")	35(1-3/8")

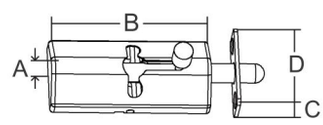

BARREL BOLT

Stainless Steel 316

- Supplied with bushing to eliminate rattle and provide smooth operation.
- Screw size #6.

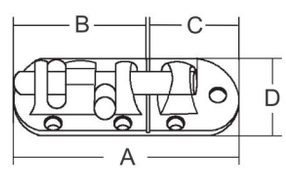

Bulk No.	A mm	B mm	C mm	D mm
8731444	91(3-9/16")	55(2-5/32")	36(1-7/16")	39(1-1/2")
8731446	111(4-3/8")	75(3")	36(1-7/16")	39(1-1/2")

OVER CENTER LATCH

NEW

Stainless Steel 316

- Heavy duty cast construction with strong holding power.
- Catch tension can be adjusted by rotating the off-centered strike.
- 0507878: Complete with eye for padlock up to 6mm shackle.
- Two jig options available for different installation methods.
- 9907881-G is included.
- 9907881-J is sold separately.
- Screw size #8.

INSTALLATION JIG	
9907881-G	9907881-J
Slide In	

W/ Eye

Standard

90° Mount

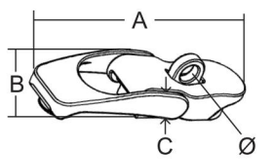

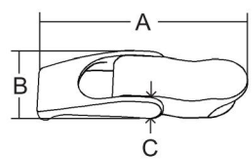

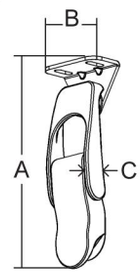

Bulk No.	Model	Lock	A mm	B mm	C mm	Ø mm
0507878	W/ Eye	No	82.5(3-1/4")	25(1")	15(9/16")	7(1/4")
9907881	Standard	No	82(3-1/4")	25(1")	15(9/16")	-
9907883	Standard	Yes	82(3-1/4")	25(1")	15(9/16")	-
9907882	90° Mount	No	91(3-9/16")	32(1-1/4")	15(9/16")	-
9907884	90° Mount	Yes	91(3-9/16")	32(1-1/4")	15(9/16")	-
9907881-G	Strike installation jig					
9907881-J	Latch body installation jig					

INSTRUCTIONS FOR INSTALLING THE LATCH BODY FIRST

1. 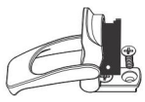
Force the spring base to the open position by sliding the jig (9907881-G) into the open latch. Mount the latch body with #8 or M4 fasteners.

2. 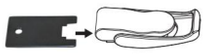
Slide in the strike jig (9907881-G).

3.
Mark the strike hole.

4.
Install the strike with #8 or M4 fasteners and rotate for desired tension.

INSTRUCTIONS FOR INSTALLING THE STRIKE FIRST

1.
Install the strike with #8 or M4 fastener. Rotate the dot toward the latch.

2. 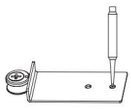
Put the jig (9907881-J) next to the dot and mark two holes.

3. 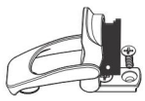
Force the spring base to the open position by sliding the jig (9907881-G) into the open latch. Install both fasterners (#8 or M4).

POSITION OVER CENTER LATCH

Stainless Steel 316

- New contemporary design.
- Spring loaded cam over latch.
- Wire loop can stay in any position when unlatched.
- Catch tension can be adjusted up to 5.7mm (3/16") by rotating the strike and resetting the housing.
- Screw size #8.

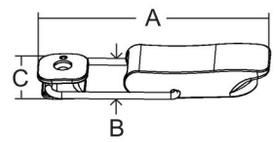

Bulk No.	A mm	B mm	C mm
0107895	100.6(4")	31.5(1-1/4")	11.5(7/16")

CAM OVER LATCH

Stainless Steel 316

- Elongated wire loop is tensioned when latched.
- Easy installation and superior performance.
- Screw size #8.

9121590

9121592

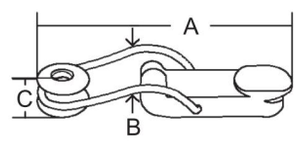

Bulk No.	Model	A mm	B mm	C mm
9121590	W/O Lock	94(3-11/16")	29(1-1/8")	13(1/2")
9121592	W/ Lock	94(3-11/16")	29(1-1/8")	13(1/2")

HATCH FASTENER

Stainless Steel 304

- Over center cam action.
- Length can be adjusted via threaded stem.
- Screw size #8.

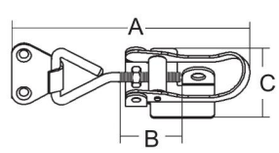

Bulk No.	A mm	B mm	C mm
8623016	98(3-7/8")	25(1")	26(1")
8933084	155(6-1/8")	49.5(1-15/16")	40(1-9/16")

TOGGLE CATCH

Stainless Steel 316

- Over center cam action catch.
- Accepts padlock up to 6mm shackle.
- Screw size #8.

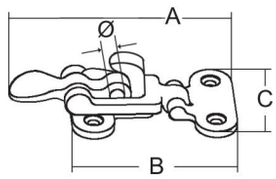

Bulk No.	A mm	B mm	C mm	Ø mm
8821203	100(3-15/16")	75(3")	46(1-13/16")	6.5(1/4")

HOLD DOWN CLAMP

Stainless Steel 316

- Over center tension latch.
- Thin cast for modern look.
- Accepts padlock up to 6mm shackle.
- Screw size #6.

8821204

8821205

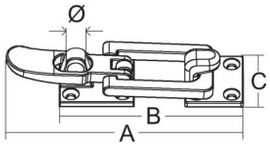

Bulk No.	A mm	B mm	C mm	Ø mm
8821204	95(3-3/4")	75(3")	28(1-1/8")	7(9/32")
8821205	89(3-1/2")	70(2-3/4")	28(1-1/8")	7(9/32")

SWIVEL HASP

Stainless Steel 316

- Swivel locking eye.
- Accepts padlock up to 8mm shackle.
- Screw size #6.

3398514

3408514

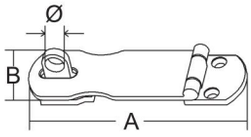

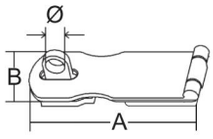

Bulk No.	A mm	B mm	Ø mm
3398514	90(3-1/2")	26.5(1-/16")	9(3/8")
3408514	75(3")	26.5(1-/16")	9(3/8")

SWIVEL CABIN HOOK

NEW

Stainless Steel 316

- Double swivel design.
- Second strike is included to keep door open.
- Screw size M3 or #6.

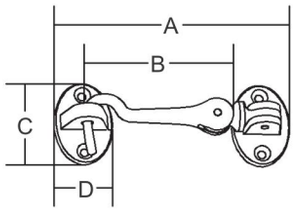

Bulk No.	A mm	B mm	C mm	D mm
9707455	102(4")	65(2-1/2")	37(1-7/16")	25(1")

CABIN DOOR HOOK

Stainless Steel 316 Base

- Stainless steel 316 base and stainless steel 304 hook provide better quality.
- Screw size #8.

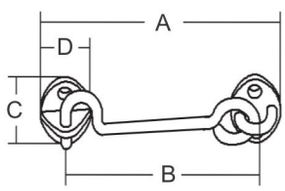

Bulk No.	A mm	B mm	C mm	D mm
9021397	69(2-11/16")	52(2")	32(1-1/4")	22(7/8")
9021398	88(3-7/16")	71(2-3/4")	32(1-1/4")	22(7/8")
9021399	119(4-11/16")	102(4")	32(1-1/4")	22(7/8")

SLIDING DOOR STOP

Stainless Steel 316

- Closed pin design.
- Black PVC cover on stopping plate.
- Screw size #8.

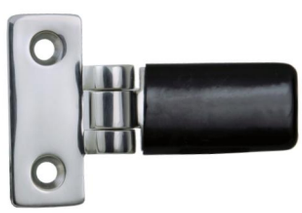

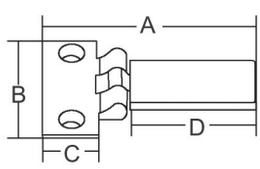

Bulk No.	A mm	B mm	C mm	D mm
8936614	71(2-13/16")	47.5(1-7/8")	18(11/16")	39(1-1/2")
8936615	91(3-9/16")	47.5(1-7/8")	18(11/16")	59(2-5/16")

CUBIC MAG. HOLDER SET

NEW

Stainless Steel 316 & Nylon

- Encapsulated magnet for marine use.
- Marine-grade stainless steel thin wall construction.
- Superior in preventing rust.
- Holder can be rotated to any desired angle.
- Product can be installed without disassembly.
- Contemporary design.
- Sold as set.
- Screw size #8.

Patented

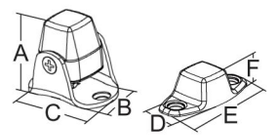

Bulk No.	A mm	B mm	C mm	D mm	E mm	F mm	Holding Power
0107358	35(1-3/8")	29(1-1/8")	44(1-3/4")	24(15/16")	53(2-1/16")	14.5(9/16")	3.3kg(7.3lb)

CUBIC ADJUSTABLE MAG. HOLDER SET

NEW

Stainless Steel 316 & Nylon

- Encapsulated magnet for marine use.
- Marine-grade stainless steel thin wall construction.
- Superior in preventing rust.
- Holder can be adjusted and rotated to desired angle and height (adjustable to one full inch).
- Contemporary design.
- Sold as set.
- Screw size #8.

Patented

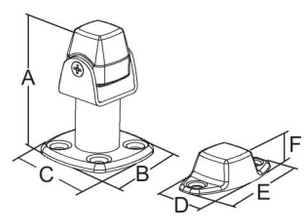

Bulk No.	A mm	B mm	C mm	D mm	E mm	F mm	Holding Power
0107360	72~97.5(2-7/8"~3-7/8")	48(1-7/8")	48(1-7/8")	24(15/16")	53(2-1/16")	14.5(9/16")	3.3kg(7.3lb)

UNIVERSAL MAG. HOLDER

NEW

Stainless Steel 316 & Nylon

- Encapsulated magnet for marine use.
- Hidden screw design.
- Wide angle application.
- Sold in pairs.

Patented

Bulk No.	Mag. Size	A mm	B mm	Holding Power	Screw Size
9707332	20 x 10	34(1-5/16")	21(7/8")	2.6kg(5.7lb)	#10
9707335	30 x 15	46(1-13/16")	28(1-1/8")	5.8kg(12.8lb)	1/4"

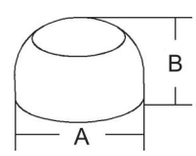

CUBIC MAG. HOLDER

NEW

Stainless Steel 316

- Contemporary design.
- Marine-grade stainless steel thin wall construction.
- Encapsulated magnet for marine use.
- Superior in preventing rust.
- Match any north and south pole magnets as a set.
- The rubber-bumper-type magnet should match with a same or bigger size one to prevent damages.
- 0107361P is adjustable up to one full inch.
- Sold by piece.
- Screw size #8.

Patented

MAGNET SIZE		HOLDING POWER	
		W/O rubber bumper	W/ rubber bumper
15 x 10	15 x 10	7.3lb / 3.3kg	3.3lb / 1.5kg
25 x 10	25 x 10	15.4lb / 7.0kg	11.5lb / 5.2kg
35 x 10	35 x 10	19.8lb / 9.0kg	15.8lb / 7.2kg

SWIVEL TYPE

A

B

C

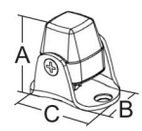

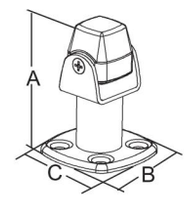

Bulk No.	Mag. Pole	Model	Mag. Size	A mm	B mm	C mm
0207667P	North	A	15 x 10	35(1-3/8")	29(1-1/8")	44(1-3/4")
0207669P	North	B	25 x 10	41.5(1-5/8")	37(1-7/16")	53(2-1/8")
0107361P	North	C	15 x 10	72~97.5(2-7/8"~3-7/8")	48(1-7/8")	48(1-1/8")

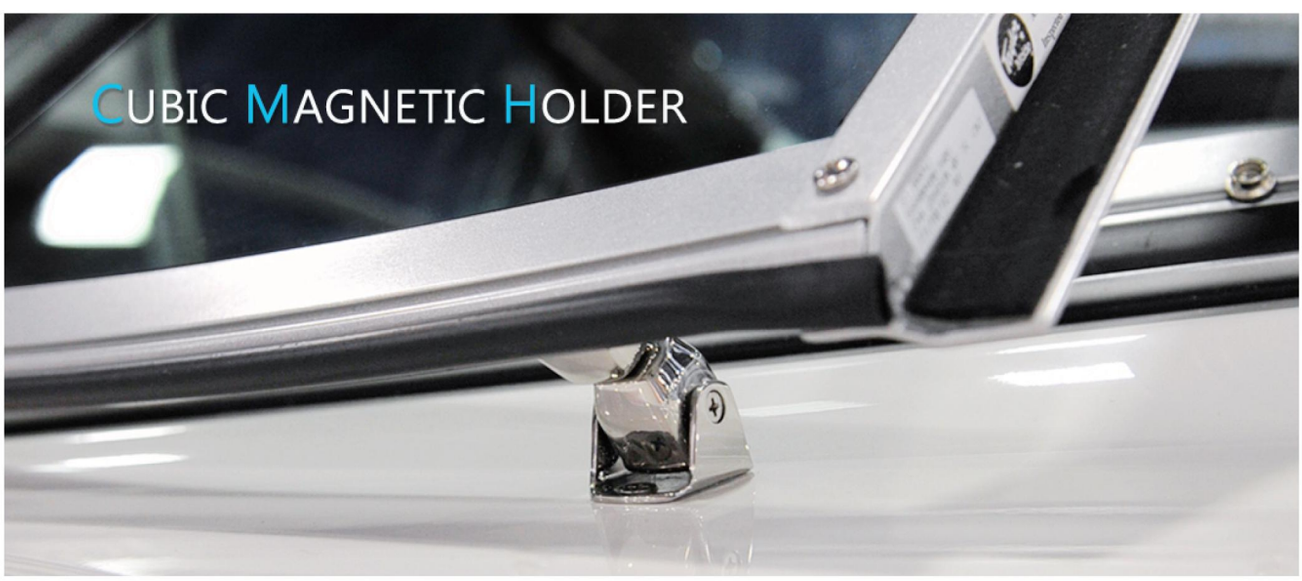

NEW

Mag. Holder Bottom	
P (North)	N (South)

FLUSH TYPE

A

B

C

W/ Rubber Bumper

D

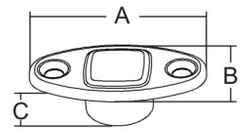

Bulk No.	Mag. Pole	Model	Mag. Size	A mm	B mm	C mm
0207661P	North	A	15 x 10	50(2")	25(1")	10.5(13/32")
0207661N	South	A	15 x 10	50(2")	25(1")	10.5(13/32")
0207661NR	South	D	15 x 10	50(2")	25(1")	10.5(13/32")
0207663P	North	B	25 x 10	60(2-3/8")	35(1-3/8")	10.5(13/32")
0207663N	South	B	25 x 10	60(2-3/8")	35(1-3/8")	10.5(13/32")
0207663NR	South	D	25 x 10	60(2-3/8")	35(1-3/8")	10.5(13/32")
0207665P	North	C	35 x 10	70(2-3/4")	45(1-3/4")	10.5(13/32")
0207665N	South	C	35 x 10	70(2-3/4")	45(1-3/4")	10.5(13/32")
0207665NR	South	D	35 x 10	70(2-3/4")	45(1-3/4")	10.5(13/32")

PROUD TYPE

E

F

G

W/ Rubber Bumper

H

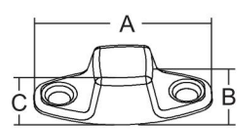

Bulk No.	Mag. Pole	Model	Mag. Size	A mm	B mm	C mm
0207671P	North	E	15 x 10	53(2-1/16")	24(15/16")	14.5(9/16")
0207671N	South	E	15 x 10	53(2-1/16")	24(15/16")	14.5(9/16")
0207671NR	South	H	15 x 10	53(2-1/16")	24(15/16")	14.5(9/16")
0207673P	North	F	25 x 10	60(2-3/8")	30(1-3/16")	14.5(9/16")
0207673N	South	F	25 x 10	60(2-3/8")	30(1-3/16")	14.5(9/16")
0207673NR	South	H	25 x 10	60(2-3/8")	30(1-3/16")	14.5(9/16")
0207675P	North	G	35 x 10	70(2-3/4")	40.5(1-19/32")	14.5(9/16")
0207675N	South	G	35 x 10	70(2-3/4")	40.5(1-19/32")	14.5(9/16")
0207675NR	South	H	35 x 10	70(2-3/4")	40.5(1-19/32")	14.5(9/16")

MAG. DOOR HOLDER

Stainless Steel 316

- Holder can be adjusted to any desired angle.
- To position the mag. ball, loctite the fasteners before screwing in.
- Magnets shrouded in stainless steel withstand the marine environment.
- Sold as set.
- Screw size #8.
- Not available in USA market.

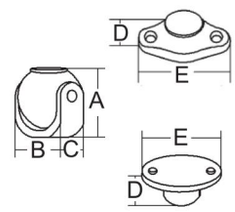

Bulk No.	Mag. Size Ball	Strike	A mm	B mm	C mm	D mm	E mm	Holding Power
9121380	20x15	Proud 20x10	34(1-5/16")	36.5(1-7/16")	18.5(3/4")	15(5/8")	46.5(1-13/16")	3.7kg(8.2lb)
9321755	20x15	Proud 30x15	34(1-5/16")	36.5(1-7/16")	18.5(3/4")	19(3/4")	70(2-3/4")	5.9kg(13lb)
9421155	30x15	Proud 30x15	48(1-7/8")	50(2")	27(1-1/16")	19(3/4")	70(2-3/4")	10.9kg(24lb)
9121392	20x15	Flush 30x15	34(1-5/16")	36.5(1-7/16")	18.5(3/4")	18(3/4")	58(2-1/4")	5.8kg(12.8lb)

ADJUSTABLE MAG. DOOR HOLDER

Stainless Steel 316

- Holder can be adjusted to any desired angle and height.
- To position the mag. ball, loctite the fasteners before screwing in.
- Magnets shrouded in stainless steel withstand the marine environment.
- Sold as set.
- Base screw size #10.
- Strike screw size #8.
- Not available in USA market.

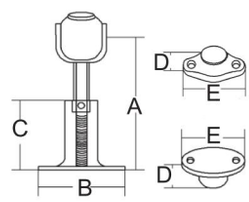

Bulk No.	Mag. Size Ball	Strike	A-Max.	A-Min.	B mm	C mm	D mm	E mm	Holding Power
9121382	20x20	Proud 20x10	86(3-3/8")	60(2-3/8")	51(2")	39(1-1/2")	15(5/8")	46.5(1-13/16")	3.8kg(8.4lb)
9321757	20x20	Proud 30x15	86(3-3/8")	60(2-3/8")	51(2")	39(1-1/2")	19(3/4")	70(2-3/4")	6.5kg(14.3lb)
9121383	20x20	Flush 30x15	101(4")	75(2-15/16")	51(2")	39(1-1/2")	18(3/4")	58(2-1/4")	6.5kg(14.3lb)
9421158	30x15	Proud 30x15	95(3-3/4")	69(2-3/4")	51(2")	39(1-1/2")	19(3/4")	70(2-3/4")	10.7kg(23.6lb)

MAG. DOOR HOLDER

Nylon

- Can be adjusted to any desired angle.
- To position the mag. ball, loctite the fasteners before screwing in.
- Encapsulated magnet for marine applications.
- Sold as set.
- Screw size #8.
- Not available in USA market.

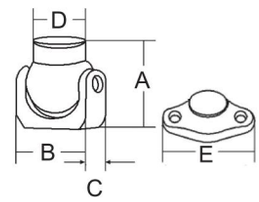

Bulk No.	Color	Mag. Size Ball	Mag. Size Strike	A mm	B mm	C mm	D mm	E mm	Holding Power
9421170	Black	20x15	20x10	42(1-5/8")	39(1-1/2")	19(3/4")	25(1")	48(1-7/8")	3.8kg(8.4lb)
9421172	White	20x15	20x10	42(1-5/8")	39(1-1/2")	19(3/4")	25(1")	48(1-7/8")	3.8kg(8.4lb)

MAG. DOOR HOLDER

Nylon

- Encapsulated magnet for marine applications.
- Sold as set.
- Screw size #8.
- Not available in USA market.

Proud & Proud

A

Flush & Flush

B

Proud & Flush

C

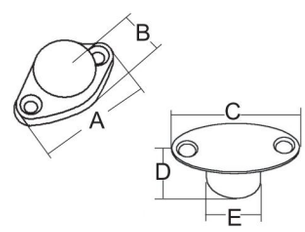

Bulk No.	Model	Color	Mag. Size	A mm	B mm	C mm	D mm	E mm	Holding Power
9421180	A	Black	20x10	48(1-7/8")	15(5/8")	-	-	-	2.5kg(5.5lb)
9421192	B	White	20x10	-	-	62(2-7/16")	9(3/8")	25(1")	2.8kg(6.2lb)
9421316	C	Black	20x10	48(1-7/8")	15(5/8")	62(2-7/16")	9(3/8")	25(1")	2.9kg(6.4lb)
9421317	C	White	20x10	48(1-7/8")	15(5/8")	62(2-7/16")	9(3/8")	25(1")	2.9kg(6.4lb)
9421318	C	Black	30x15	72(2-13/16")	19(3/4")	62(2-7/16")	14(9/16")	25(1")	10.5kg(23.2lb)

DOOR HOLDER

Stainless Steel 316 Strike

- Stainless steel 304 clamp.
- Low friction spring roller bearing style for ease of use.
- Screw size #8.
- Not available in USA market.

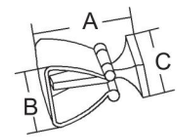

Bulk No.	A mm	B mm	C mm
8733015	42(1-11/16")	35(1-3/8")	42.5(1-11/16")
8733016	29(1-1/8")	20.5(13/16")	31(1-1/4")

BALL CATCH

Stainless Steel 316

- Can be adjusted easily after installation for perfect alignment.
- Comes with BCP slotted screws.
- Screw size #6.
- Not available in USA market.

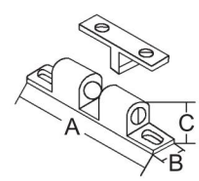

Bulk No.	A mm	B mm	C mm
9121518	51(2")	9(3/8")	11(7/16")
9221850	64(2-1/2")	10(3/8")	13(1/2")

DOOR STOP CATCH

Stainless Steel 316

- Automatic latch features rubber bumper stop.
- **Add "-W" after the bulk No. for white bumper option.**
- Screw size #6.
- Not available in USA market.

Horizontal

Vertical

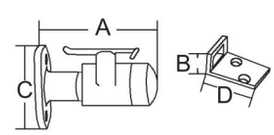

Bulk No.	Model	A mm	B mm	C mm	D mm
9021217	Horizontal	71(2-13/16")	17.5(11/16")	51(2")	30(1-3/16")
9021224	Horizontal	88(3-7/16")	17.5(11/16")	51(2")	30(1-3/16")
9121321	Vertical	75(2-15/16")	29(1-1/8")	51(2")	30(1-3/16")

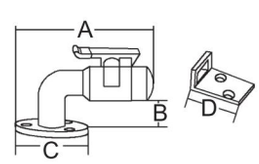

SNAP IN PLUNGER

Nylon & Rubber & PP

- Compact design for versatile applications on seat cushions, hatches, electric panels, etc.
- Different holding power can be customized upon request.
- 0107426: Engagement can be adjusted by reversing or removing the spacer under catch.
- 0107426: 31.75mm (1-1/4") installation hole is required.
- 0107427/8: 50.8mm (2") installation hole is required.
- Marking punch to ensure correct alignment is sold separately.

Patented

0107426

0107427/8

0107426 CATCH HEIGHT

Without Spacer	With Spacer	Reverse Spacer
11(7/16")	13.5(9/16")	16(5/8")
Tighter Engagement	←	Looser Engagement

Marking Punch

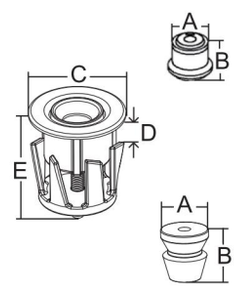

Bulk No.	A mm	B mm	C mm	D mm	E mm	Screw	Holding Power
0107426	12.5(1/2")	13.5(9/16")	39(1-1/2")	0~13(0~1/2")	46(1-13/16")	M4 or #8	8kg(17lb)
0107426-G	Marking Punch for 0107426						
0107427	25.4(1")	27(1-1/16")	60(2-3/8")	3~19(1/8"~3/4")	57(2-1/4")	M6 or 1/4"	10kg(22lb)
0107428	25.4(1")	27(1-1/16")	60(2-3/8")	3~19(1/8"~3/4")	57(2-1/4")	M6 or 1/4"	17kg(37lb)
1007420-G	Marking Punch for 0107427/8						

INSTALLATION INSTRUCTION

SNAP IN

TIGHTEN SCREW

MARKING

HOLD IN PLACE

SCREW IN PLUNGER

NEW

Stainless Steel 316 Cover & Nylon & Rubber & PP

- Easy to install.
- Different holding power can be customized upon request.
- Engagement can be adjusted by reversing or removing the spacer under catch.
- Marking punch to ensure correct alignment is sold separately.
- Screw size #8.

Patented

0507475

0507476

Marking Punch

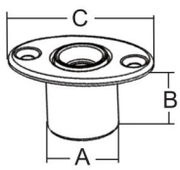

CATCH HEIGHT

Without Spacer	With Spacer	Reverse Spacer
11(7/16")	13.5(9/16")	16(5/8")
Tighter Engagement	← →	Looser Engagement

Bulk No.	A mm	B mm	C mm	D mm	E mm	Screw	Holding Power
0507475	28(1-1/8")	25.5(1")	58(2-1/4")	13.5(9/16")	12.5(1/2")	M4 or #8	8kg(17lb)
0507476	28(1-1/8")	25.5(1")	60(2-3/8")	13.5(9/16")	12.5(1/2")	M4 or #8	8kg(17lb)
0107426-G	Marking Punch						

CATCH PLUNGER

Rubber & PP

- Easy to install.
- Different holding power can be customized upon request.
- 0307424: Engagement can be adjusted by reversing or removing the spacer under catch.
- Marking punch to ensure correct alignment is sold separately.

0307424

1007417
1007421

Marking Punch

0307424 CATCH HEIGHT

Without Spacer	With Spacer	Reverse Spacer
11(7/16")	13.5(9/16")	16(5/8")
Tighter Engagement	← →	Looser Engagement

Bulk No.	A mm	B mm	C mm	D mm	Screw	Holding Power
0307424	21(13/16")	20(13/16")	12.5(1/2")	13.5(9/16")	M4 or #8	8kg(17lb)
0607425	21(13/16")	20(13/16")	12.5(1/2")	13.5(9/16")	M4 or #8	16kg(35lb)
0107426-G	Marking Punch for 0307424/0607425					
1007417	39(1-1/2")	31(1-1/4")	25.4(1")	27(1-1/16")	M6 or 1/4"	10kg(22lb)
1007421	39(1-1/2")	31(1-1/4")	25.4(1")	27(1-1/16")	M6 or 1/4"	17kg(37lb)
1007420-G	Marking Punch for 1007417/21					

HATCH PLUNGER

NEW

Stainless Steel 316 & Rubber & PP

- Compact design for versatile application on small anchor lockers, seat cushions, doors, hatches, access panels, etc.
- Comes with 90° stainless steel mounting bracket.
- It's recommended to use with lift handle as a package.
- Lift handle option: 0307314, 8821202, 0107865, 1007861, 1007863. (Please refer to p.39.)
- Screw size M3 or #6 for bracket.
- Screw size M5 or #10 for rubber holder.
- Marking punch to ensure correct alignment is sold separately.

Patented

0307423-G

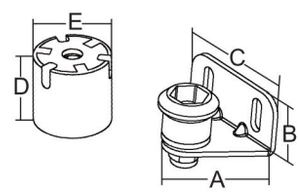

Bulk No.	A mm	B mm	C mm	D mm	E mm	Holding Power
0307423	22.5(7/8")	16(5/8")	32(1-1/4")	20(13/16")	21(13/16")	8kg(17lb)
0307423-G	Marking Punch					

INSTALLATION INSTRUCTION

INSTALL BRACKET

PLACE JIG ON TOP OF HOLDER

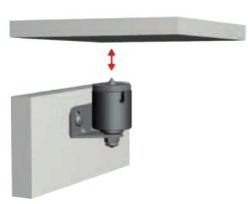

MARKING

HOLD IN PLACE

GRAND SERIES - LIFT HANDLE

Stainless Steel 316

- New full handle and flush design.
- Features a spring-loaded handle for silent operation.
- Hidden screw and watertight design.
- 1" installation hole is required.
- Screw size #6.

Patented

1007863

1007861

Bulk No.	A mm	B mm	C mm
1007861	51(2")	13(1/2")	4.5(3/16")
1007863	51(2")	13(1/2")	4.5(3/16")

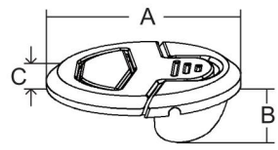

GRAND SERIES - LIFT HANDLE

Nylon

- New full handle and flush design.
- Features a spring-loaded handle for silent operation.
- Hidden screw and watertight design.
- 1" installation hole is required.
- Screw size #8.

Patented

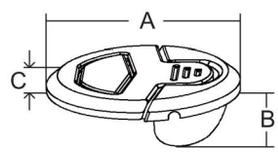

Bulk No.	A mm	B mm	C mm
0107865	51(2")	12.5(1/2")	6(1/4")

HATCH PULL

Stainless Steel 316

- Heavy duty disc with 30° angle for easy lifting.
- Comes with rubber gasket and hold-down SS316 spring for rattle free operation.
- 8821202 is not available in USA market.

0307314

8821202

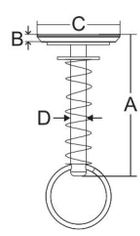

Bulk No.	Model	A mm	B mm	C mm	D mm
0307314	W/ Spring	54(2-1/8")	3(1/8")	32(1-1/4")	6(1/4")
8821202	W/O Spring	54(2-1/8")	3(1/8")	32(1-1/4")	6(1/4")

12MM PULL RING

Stainless Steel 316

- Designed to fit popular 12mm material.
- Pop out design.
- Screw size #8.

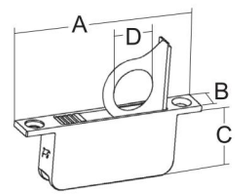

Bulk No.	A mm	B mm	C mm	D mm
1007345	85(3-3/8")	12(1/2")	27.5(1-1/8")	19(3/4")

PULL RING

Stainless Steel 316

- Flush hatch pull.
- Pop out design.
- Screw size #8.

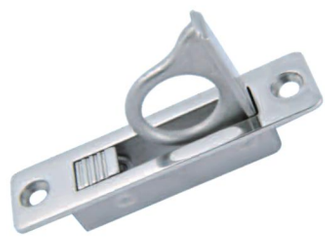

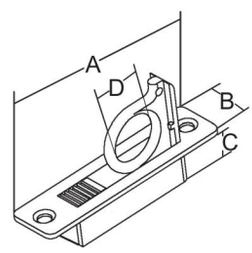

Bulk No.	A mm	B mm	C mm	D mm
9507480	83(3-1/4")	21(13/16")	11.5(7/16")	19(3/4")

PULL PIN LATCH

Stainless Steel 316

- Spring-loaded 3/8" pin latch.
- 5/8" installation hole is required.
- 0107353: Pull and rotate knob to hold pin in position.

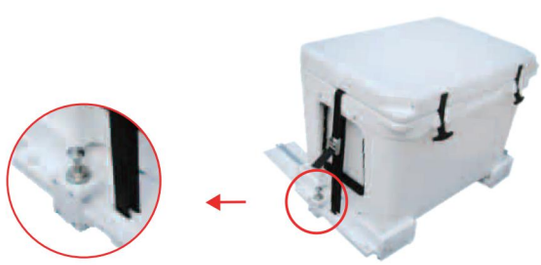

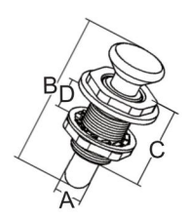

Bulk No.	Model	A mm	B mm	C mm	D-Max. mm
1007352	Standard	9.5(3/8")	56.2(2-3/16")	28(1-1/8")	18.5(3/4")
0107353	Position	9.5(3/8")	56.2(2-3/16")	28(1-1/8")	18.5(3/4")

RATCHET ANTENNA MOUNT

Stainless Steel 316

- Bright polished heavy duty investment cast construction.
- Fits antennas using 1"-14 threads.
- Grip knob for easy angle adjustment.
- Screw size #14.

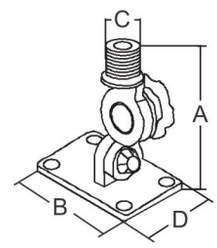

Bulk No.	A mm	B mm	C mm	D mm
9001202	138(5-1/2")	92(3-5/8")	25(1")	52(2")

HIGH PROFILE ANTENNA MOUNT

Stainless Steel 316

- Bright polished heavy duty investment cast construction.
- Fits antennas using 1"-14 threads.
- Screw size #14.

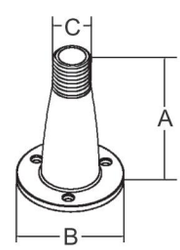

Bulk No.	A mm	B mm	C mm
9001203	102(4")	70.5(2-3/4")	25(1")

LOW PROFILE ANTENNA MOUNT

Stainless Steel 316

- Fits antennas using 1"-14 threads.
- Screw size #10.

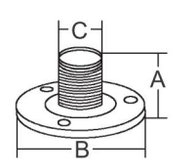

Bulk No.	A mm	B mm	C mm
8801201	41(1-5/8")	70(2-3/4")	25(1")

WASH DOWN FAUCET

NEW

Stainless Steel 316

- Quick 90º turn for full open and close.
- Flows 6 gallons per minute.
- Accommodates 1/2" male pipe fitting.
- Optional water hose thread.
- Recommended to use under 60 psi.
- Screw size #8.

Standard

0403722

0403724

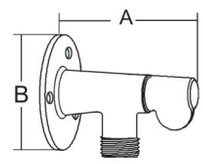

Bulk No.	Model	A mm	B mm	Water Hose Thread
9004301	Standard	85(3-5/16")	60(2-3/8")	3/4" -14T BSP or 3/4" -11T FH
0403722	Fresh	85(3-5/16")	60(2-3/8")	3/4" -14T BSP or 3/4" -11T FH
0403724	Raw	85(3-5/16")	60(2-3/8")	3/4" -14T BSP or 3/4" -11T FH

WATER OUTLET

Stainless Steel 316

- Uses standard water hose thread.
- Accommodates 1/2" pipe fitting.
- Comes with captured stainless steel sealed cap and stainless steel chain.
- Optional water hose thread.
- Screw size #8.

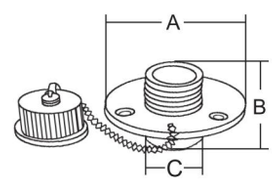

Bulk No.	A mm	B mm	C mm	Water Hose Thread
9004302	69.5(2-3/4")	34(1-3/8")	26(1")	3/4" -14T BSP or 3/4" -11T FH

WATER INLET

Stainless Steel 316

- Uses standard water hose thread.
- Accommodates 1/2" pipe fitting.
- Comes with captured stainless steel sealed cap and stainless steel chain.
- Optional water hose thread.
- Recommended to use under 60 psi.
- Screw size #8.

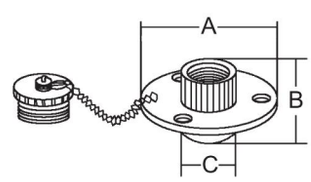

Bulk No.	A mm	B mm	C mm	Water Hose Thread
9004305	69.5(2-3/4")	36(1-7/16")	26(1")	3/4" -14T BSP or 3/4" -11T FH

MEGA FLOW THRU HULL

Stainless Steel 316

NEW

Video

- Four face sizes with six barb options.
- Light weight construction.
- High density marine-grade stainless steel ensures strength and prevents crevice corrosion.
- Maximum water flow design.
- Upgraded inner finish.
- Watertight gasket is included.

Patented

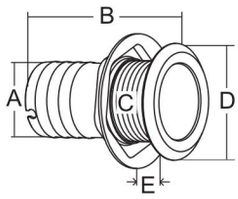

Bulk No.	A mm	B mm	C mm	D mm	E-Max. mm	E-Min. mm
1003771	16(5/8")	64(2-1/2")	22(7/8")	32(1-1/4")	22(7/8")	5(3/16")
1003772	19(3/4")	64(2-1/2")	22(7/8")	32(1-1/4")	22(7/8")	5(3/16")
1003773	25(1")	67(2-5/8")	31.5(1-1/4")	46(1-13/16")	22(7/8")	5(3/16")
1003774	29(1-1/8")	67(2-5/8")	31.5(1-1/4")	46(1-13/16")	22(7/8")	5(3/16")
1003776	38(1-1/2")	78(3-1/16")	41(1-5/8")	59(2-5/16")	22(7/8")	5(3/16")
1003777	51(2")	106(4-3/16")	57(2-1/4")	77(3")	32(1-1/4")	5(3/16")

WRENCH TOOL FOR MEGA SERIES

Aluminum

- Specially designed to tighten/ loosen the nuts of Mega Series.
- To select the suitable wrench tool, please refer to size "C" of Mega Series.

Bulk No.	Fit Size "C"
1003771-G	22(7/8")
1003773-G	31.5(1-1/4")
1003776-G	41(1-5/8")
1003777-G	57(2-1/4")

MEGA FLOW DRIPLESS THRU HULL

NEW

Stainless Steel 316

Video

- Drip collar on the face prevents hull streaking.
- Three face sizes with five barb options.
- Light weight construction.
- High density marine-grade stainless steel ensures strength and prevents crevice corrosion.
- Maximum water flow design.
- Upgraded inner finish.
- Watertight gasket is included.

Patented

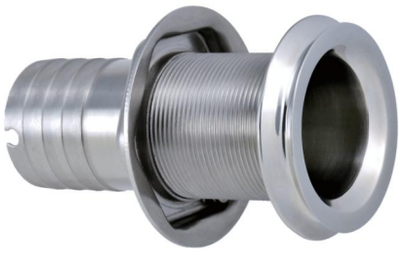

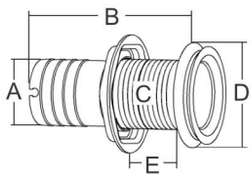

Bulk No.	A mm	B mm	C mm	D mm	E-Max. mm	E-Min. mm
0203801	16(5/8")	80(3-1/8")	22(7/8")	32(1-1/4")	38(1-1/2")	5(3/16")
0203802	19(3/4")	80(3-1/8")	22(7/8")	32(1-1/4")	38(1-1/2")	5(3/16")
0203803	25(1")	83(3-1/4")	31.5(1-1/4")	47.5(1-7/8")	38(1-1/2")	5(3/16")
0203804	29(1-1/8")	83(3-1/4")	31.5(1-1/4")	47.5(1-7/8")	38(1-1/2")	5(3/16")
0203806	38(1-1/2")	94(3-11/16")	41(1-5/8")	60.5(2-3/8")	38(1-1/2")	5(3/16")

90° MEGA DRIPLESS THRU HULL

NEW

Stainless Steel 316

- Drip collar on the face prevents hull streaking.
- Low profile for limited space.
- Light weight construction.
- Maximum water flow design.
- Upgraded inner finish.
- Watertight gasket is included.

Patented

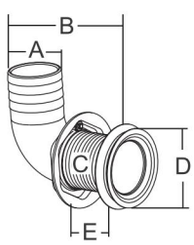

Bulk No.	A mm	B mm	C mm	D mm	E-Max. mm	E-Min. mm
0203806-8	38(1-1/2")	94(3-11/16")	41(1-5/8")	60.5(2-3/8")	13(1/2")	5(3/16")

THREADED THRU HULL

Stainless Steel 316

- Grounding washer is available upon request.

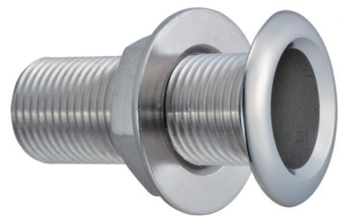

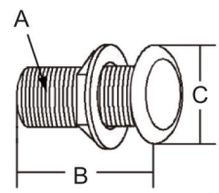

Bulk No.	Thread	A	B mm	C mm
9105713	BSP	1/2"	61(2-7/16")	34(1-3/8")
9105715	BSP	3/4"	71(2-3/4")	40(1-5/8")
9105717	BSP	1"	74(2-7/8")	48(1-7/8")
9105719	BSP	1-1/4"	80(3-3/16")	59(2-5/16")
9105741	BSP	1-1/2"	86(3-3/8")	68(2-11/16")
9105743	BSP	2"	110(4-5/16")	93(3-5/8")
9105713-A	NPT	1/2"	61(2-7/16")	34(1-3/8")
9105715-A	NPT	3/4"	71(2-3/4")	40(1-5/8")
9105717-A	NPT	1"	74(2-7/8")	48(1-7/8")
9105719-A	NPT	1-1/4"	80(3-3/16")	59(2-5/16")
9105741-A	NPT	1-1/2"	86(3-3/8")	68(2-11/16")
9105743-A	NPT	2"	110(4-5/16")	93(3-5/8")

STRAINER INTAKE THRU HULL

Stainless Steel 316

- Combines a cast thru hull into a water scoop strainer.
- Scoop strainer helps filter the debris.
- Comes with grounding washer.

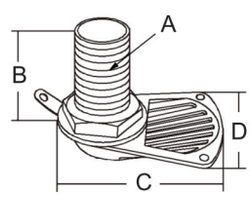

Bulk No.	Thread	A	B mm	C mm	D mm	Screw Size
9105862	BSP	1/2"	57(2-1/4")	63.5(2-1/2")	44.5(1-3/4")	#6
9105864	BSP	3/4"	62(2-7/16")	98.5(3-7/8")	73.5(2-7/8")	#8
9105866	BSP	1"	62(2-7/16")	98.5(3-7/8")	73.5(2-7/8")	#8
9105868	BSP	1-1/4"	85(3-3/8")	120(4-3/4")	89(3-1/2")	#12
9105870	BSP	1-1/2"	85(3-3/8")	120(4-3/4")	89(3-1/2")	#12
9105862-A	NPT	1/2"	57(2-1/4")	63.5(2-1/2")	44.5(1-3/4")	#6
9105864-A	NPT	3/4"	62(2-7/16")	98.5(3-7/8")	73.5(2-7/8")	#8
9105866-A	NPT	1"	62(2-7/16")	98.5(3-7/8")	73.5(2-7/8")	#8
9105868-A	NPT	1-1/4"	85(3-3/8")	120(4-3/4")	89(3-1/2")	#12
9105870-A	NPT	1-1/2"	85(3-3/8")	120(4-3/4")	89(3-1/2")	#12

BARBED THRU HULL

Stainless Steel 316

- Investment cast construction.
- Reduced face sizes provides a small visual footprint.
- Three face sizes incorporate seven barb fittings.

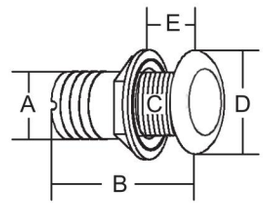

Bulk No.	A mm	B mm	C mm	D mm	E-Max. mm	E-Min. mm
9005203	16(5/8")	70.5(2-3/4")	32(1-1/4")	43(1-11/16")	31(1-3/16")	4(3/16")
9005204	19(3/4")	70.5(2-3/4")	32(1-1/4")	43(1-11/16")	31(1-3/16")	4(3/16")
9005205	25(1")	70.5(2-3/4")	32(1-1/4")	43(1-11/16")	31(1-3/16")	4(3/16")
9005206	29(1-1/8")	70.5(2-3/4")	32(1-1/4")	43(1-11/16")	31(1-3/16")	4(3/16")
9005207	33(1-1/4")	80(3-3/16")	45(1-3/4")	65(2-9/16")	32(1-5/16")	5(3/16")
9005208	38(1-1/2")	80(3-3/16")	45(1-3/4")	65(2-9/16")	32(1-5/16")	5(3/16")
9005218	51(2")	126(5")	56(2-3/16")	80(3-1/4")	53(2-1/16")	5(3/16")

90° SHORT THRU HULL

Stainless Steel 316

- Cast stainless steel construction.
- Ideal for limited space and can eliminate a kink in hose.

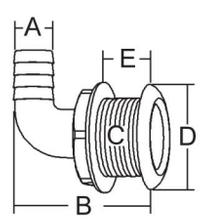

Bulk No.	A mm	B mm	C mm	D mm	E-Max. mm	E-Min. mm
9305322	19(3/4")	62(2-7/16")	32(1-1/4")	43(1-11/16")	19(3/4")	3(1/8")
9305324	25(1")	65(2-9/16")	32(1-1/4")	43(1-11/16")	19(3/4")	3(1/8")
9305326	29(1-1/8")	67(2-5/8")	32(1-1/4")	43(1-11/16")	19(3/4")	3(1/8")
9305328	38(1-1/2")	82(3-1/4")	41(1-5/8")	59(2-5/16")	21(13/16")	4(3/16")

STALON THRU HULL

Nylon 66 + 30% Fiberglass Filled Body & Stainless Steel 316 Face

- Combining the strength and light weight of a reinforced nylon with the aesthetics of polished stainless steel.
- Tested according to ASTM D638 and ASTM D790.
- 9005260: Barb angle is designed to eliminate trapped water in the drain hose.
- Suitable for above waterline outlets.

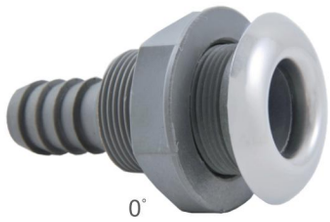

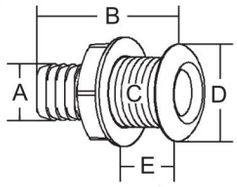

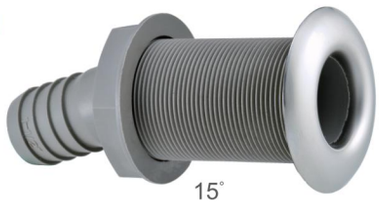

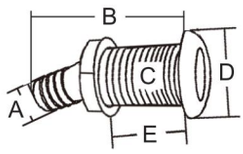

Bulk No.	Angle	A mm	B mm	C mm	D mm	E mm
9005241	0˚	16(5/8")	75(3")	33(1-5/16")	48(1-7/8")	29(1-1/8")
9005242	0˚	19(3/4")	81(3-3/16")	33(1-5/16")	48(1-7/8")	29(1-1/8")
9005263	0˚	19(3/4")	138(5-1/2")	33(1-5/16")	48(1-7/8")	86(3-3/8")
9005243	0˚	26(1")	79(3-1/8")	33(1-5/16")	48(1-7/8")	29(1-1/8")
9005244	0˚	29(1-1/8")	81(3-3/16")	33(1-5/16")	48(1-7/8")	29(1-1/8")
9005264	0˚	29(1-1/8")	138(5-1/2")	33(1-5/16")	48(1-7/8")	86(3-3/8")
9005245	0˚	32(1-1/4")	96(3-3/4")	41(1-5/8")	60(2-3/8")	32(1-1/4")
9005246	0˚	38(1-1/2")	96(3-3/4")	41(1-5/8")	60(2-3/8")	32(1-1/4")
9005255	0˚	52(2")	121(4-3/4")	56(2-1/4")	82(3-1/4")	44(1-3/4")
9005260	15˚	38(1-1/2")	166(6-1/2")	56(2-1/4")	82(3-1/4")	84(3-5/16")

90° STALON THRU HULL

Nylon 66 + 30% Fiberglass Filled Body & Stainless Steel 316 Face

- Combining the strength and light weight of a reinforced nylon with the aesthetics of polished stainless steel.
- Tested according to ASTM D638 and ASTM D790.
- Suitable for above waterline outlets.

Bulk No.	A mm	B mm	C mm	D mm	E mm
9105418	16(5/8")	63(2-1/2")	33(1-5/16")	48(1-7/8")	10(3/8")
9005262	19(3/4")	63(2-1/2")	33(1-5/16")	48(1-7/8")	10(3/8")
9005256	19(3/4")	82(3-1/4")	33(1-5/16")	48(1-7/8")	28(1-1/8")
9105419	25(1")	95(3-3/4")	33(1-5/16")	48(1-7/8")	35(1-3/8")
9005265	25(1")	108(4-1/4")	41(1-5/8")	60(2-3/8")	32(1-1/4")
9305113	29(1-1/8")	86(3-3/8")	33(1-5/16")	48(1-7/8")	25(1")
9005257	29(1-1/8")	108(4-1/4")	41(1-5/8")	60(2-3/8")	32(1-1/4")
9005258	38(1-1/2")	112(4-3/8")	41(1-5/8")	60(2-3/8")	25(1")

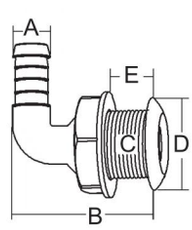

MEGA FLOW SCUPPER

NEW

Stainless Steel 316

- High density marine-grade stainless steel ensures strength and prevents crevice corrosion.
- Permanent stainless steel flapper is weighed down to assure persistent closure.
- Maximum water flow design.
- Integrated ground screw on nut.
- Watertight gasket is included.

Patented

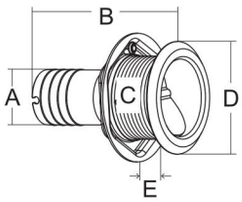

Bulk No.	Model	A mm	B mm	C mm	D mm	E-Max. mm	E-Min. mm
0103785	A	38(1-1/2")	106(4-3/16")	57(2-1/4")	77(3")	32(1-1/4")	5(3/16")
0103786	B	38(1-1/2")	148.5(5-7/8")	57(2-1/4")	77(3")	77(3")	32(1-1/4")
0103787	A	51(2")	106(4-3/16")	57(2-1/4")	77(3")	32(1-1/4")	5(3/16")
0103788	B	51(2")	148.5(5-7/8")	57(2-1/4")	77(3")	77(3")	32(1-1/4")

MEGA FLOW PIPE THREAD SCUPPER

NEW

Stainless Steel 316

- Pipe thread for valve installation.
- BSP thread is upon request.
- High density marine-grade stainless steel ensures strength and prevents crevice corrosion.
- Permanent stainless steel flapper is weighed down to assure persistent closure.
- Maximum water flow design.
- Integrated ground screw on nut.
- Watertight gasket is included.

Patented

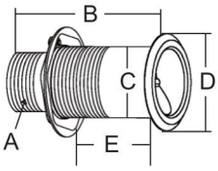

Bulk No.	A	B mm	C mm	D mm	E-max. mm	E-min. mm
0103781	1-1/2" NPSM	127(5")	57(2-1/4")	77(3")	82(3-1/4")	32(1-1/4")

STALON SCUPPER

Nylon 66 + 30% Fiberglass Filled Body & Stainless Steel 316 Face

- Combining the strength and light weight of a reinforced nylon with the aesthetics of polished stainless steel.
- Tested according to ASTM D638 and ASTM D790.
- One-way PVC flapper for discharge.

10˚

90˚

0˚

15˚

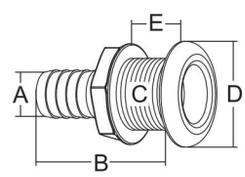

Bulk No.	Angle	A mm	B mm	C mm	D mm	E mm
9005253	0˚	38(1-1/2")	121(4-3/4")	56(2-1/4")	82(3-1/4")	44(1-3/4")
9005254	0˚	52(2")	121(4-3/4")	56(2-1/4")	82(3-1/4")	44(1-3/4")
9105541	10˚	38(1-1/2")	86(3-3/8")	56(2-1/4")	82(3-1/4")	20(3/4")
9005261	15˚	38(1-1/2")	166(6-1/2")	56(2-1/4")	82(3-1/4")	84(3-5/16")
9305460	90˚	38(1-1/2")	121(4-3/4")	56(2-1/4")	82(3-1/4")	32(1-1/4")
9005253-2	PVC Flapper only					

HOSE SCUPPER

Stainless Steel 316

- One-way PVC flapper for discharge.

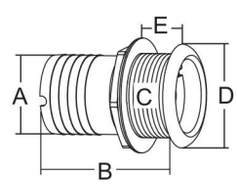

Bulk No.	A mm	B mm	C mm	D mm	E mm
9205380	51(2")	88(3-1/2")	54(2-1/16")	66(2-9/16")	27(1-1/16")

REMOVABLE COCKPIT DRAIN SCUPPER

NEW

Stainless Steel 316 Grate & Nylon Adapter

- Spoke type drain grate designed to maximize water flow.
- Stainless steel 316 grate screws into nylon body.
- Inner grate can be removed for cleaning purposes.
- Incorporates one way check ball to hold water back temporarily.
- 0403830-G is sold separately.

Install Instruction

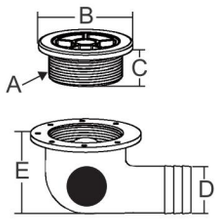

Bulk No.	A mm	B mm	C mm	D mm	E mm
0403830	2" NPSM	75(3")	27(1-1/16")	38(1-1/2")	61(2-3/8")
0403830-G	Installation Tool				

90° DECK DRAIN SCUPPER

Stainless Steel 316 Grate & Nylon Adapter

9405838-B

- Compact design for tight space.
- Stainless steel 316 grate screws into nylon body.
- Incorporates one way check ball to hold water back temporarily.
- 8731437, 9405838-B and 0403436-G are sold separately.

Shower Type

Spoke Type

Grate Removal Key

8731437	0403436-G

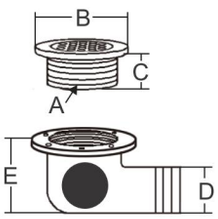

Bulk No.	Model	A	B mm	C mm	D mm	E mm
9405838	Shower Type	2" NPSM	82(3-1/4")	27(1-1/16")	38(1-1/2")	61(2-3/8")
9405844	Spoke Type	2" NPSM	75(3")	27(1-1/16")	50(2")	74(2-15/16")
9405838-B	Drain Plug for Shower Type					
8731437	Grate Removal Key for Shower Type					
0403436-G	Grate Removal Key for Spoke Type					

DECK DRAIN SCUPPER

Stainless Steel 316

- Polished and removable strainer.
- Incorporates one way check ball to prevent back flow temporarily.
- 8731437 is included.
- Screw size #8.

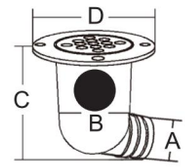

Bulk No.	Model	A mm	B mm	C mm	D mm
9405182	95°	38(1-1/2")	57(2-1/4")	86(3-3/8")	91(3-9/16")
8731436	45°	38(1-1/2")	57(2-1/4")	117(4-5/8")	91(3-9/16")
8731437	Grate Removal Key				

SCUPPER SYSTEM

NEW

Stainless Steel 316

- High water flow design.
- Permanent stainless steel flapper is weighed down to assure persistent closure.
- Tube can be cut to fit different hull range from 44.5mm~152mm (1-3/4"~6").

Patented

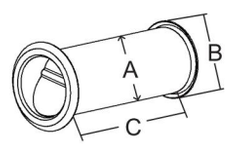

Bulk No.	A mm	B mm	C mm
0303309	57(2-1/4")	77(3")	152.5(6")

OVAL SCUPPER SYSTEM

Stainless Steel 316 Cap & Nylon

- High water flow design.
- The flapper is mounted at 15° to assure persistent closure and avoid water flowing in.
- Screw size #6.

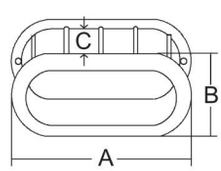

Bulk No.	A mm	B mm	C mm
9005307	181(7-1/8")	78(3-1/16")	157(6-3/16")

COCKPIT DRAIN SCUPPER SYSTEM

Stainless Steel 304

- Comes with a removable one way flow diaphragm and a stopper plug.
- Tube can be cut to fit different hull thickness.

Bulk No.	A mm	B mm	C mm
8933079	38(1-1/2")	50.8(2")	120(4-3/4")
9105655	51(2")	63(2-1/2")	120(4-3/4")
8933079C	Plug only for 8933079		
8931489C	Plug only for 9105655		
9105655-D	Diaphragm only for 9105655		

SPLASH WELL DRAIN SCUPPER

NEW

Stainless Steel 316 & Nylon & Rubber

- Stainless steel face provides deluxe appearance.
- Fits wide range of hull thickness.
- Simply press the tube at both ends to complete installation.
- One-way flapper for discharge.

Patented

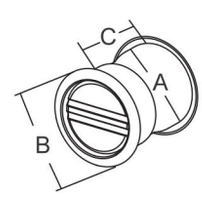

Bulk No.	A mm	B mm	C mm
0503513	38(1-1/2")	45(1-3/4")	30~38(1-3/16"~1-1/2")
0503514	38(1-1/2")	45(1-3/4")	51~73(2"~2-7/8")
0503516	38(1-1/2")	45(1-3/4")	76~100(3"~3-15/16")
0503513-V4	Rubber Flapper only		

STALON SIDE DECK DRAIN

Stainless Steel 316 Face &
Nylon 66 + 30% Fiberglass Filled Body

9005251

9005251-1

9405633

9405632

- Combining the strength and light weight of a reinforced nylon with the aesthetics of polished stainless steel.
- Tested according to ASTM D638 and ASTM D790.
- Flush edge design for lowest possible drainage point.
- Temporary drain plug to hold water back is sold separately.

Bulk No.	A mm	B mm	C mm	D mm	E-Max. mm
9005251	38(1-1/2")	127(5")	56(2-1/4")	62(2-7/16")	45(1-3/4")
9405632	38(1-1/2")	92(3-5/8")	56(2-1/4")	62(2-7/16")	22(7/8")
9405633	38(1-1/2")	92(3-5/8")	56(2-1/4")	62(2-7/16")	22(7/8")
9005251-1	Temporary Plug				

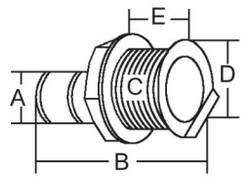

MOTOR WELL DRAIN

NEW

Stainless Steel 304

- Comes with flared flange at one end and a separate cap at the other end.
- Maximum water flow design.
- Tube can be cut to fit different hull thickness.

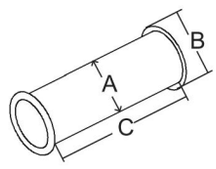

Bulk No.	A mm	B mm	C mm
9105520	25(1")	30.5(1-3/16")	74.5(2-15/16")
9105521	31.7(1-1/4")	37(1-7/16")	73.7(2-15/16")

SPLASH WELL DRAIN

NEW

Stainless Steel 316 & Nylon

- Stainless steel flange provides deluxe appearance.
- Fits wide range of hull thickness.
- Simply press the tube from both ends to complete installation.

Patented

Rubber Plug

0403500

0403506

Bulk No.	A mm	B mm	C mm
0403500	27.5(1-1/8")	34.5(1-3/8")	48~73(1-7/8"~2-7/8")
0403502	27.5(1-1/8")	34.5(1-3/8")	70~98(2-3/4"~3-7/8")
0403504	38(1-1/2")	45(1-3/4")	49~73(1-15/16"~2-7/8")
0403506	38(1-1/2")	45(1-3/4")	74~98(2-15/16"~3-7/8")
0403500C	Rubber Plug for 0403500/2		
0403504C	Rubber Plug for 0403504/6		

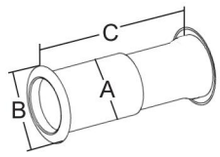

90° COCKPIT DRAIN

NEW

Stainless Steel 316

- Polished face grate.
- Compact flange design.
- One piece construction.
- Low profile for limited space under the deck.
- Easy installation.

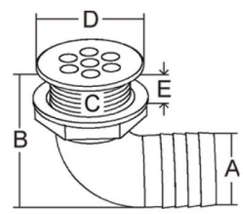

Bulk No.	A mm	B mm	C mm	D mm	E mm
0303581	19(3/4")	54.5(2-1/8")	32(1-1/4")	42(1-5/8")	13(1/2")
0303582	25(1")	58(2-1/4")	32(1-1/4")	42(1-5/8")	13(1/2")
0303583	28(1-1/8")	60.8(2-3/8")	32(1-1/4")	42(1-5/8")	13(1/2")
0303585	38(1-1/2")	76.3(3")	44.5(1-3/4")	70(2-3/4")	13(1/2")

COCKPIT DECK DRAIN

Stainless Steel 316 & Nylon Adapter

- Drain grate designed to maximize water flow.
- Complete set is NPSM threaded.
- When ordering drain grate only, BSP, NPT or NPSM is upon request.

Complete Set

Drain Grate

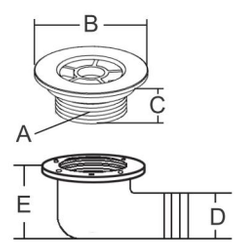

Bulk No.	Model	A	B mm	C mm	D mm	E mm	Gasket	Nut
9405834	Complete Set	2" NPSM	75(3")	27(1-1/16")	38(1-1/2")	61(2-3/8")	-	-
0403436	Complete Set	M46 X 2.2P	67(2-11/16")	22(7/8")	38(1-1/2")	59(2-3/8")	-	-
9405836	Complete Set	2" NPSM	75(3")	27(1-1/16")	51(2")	74(2-15/16")	-	-
9305351	Drain Grate	1-1/2" BSP	75(3")	50(2")	-	-	8(5/16")	Yes
9305352	Drain Grate	1-1/2" BSP	75(3")	26(1-1/16")	-	-	3(1/8")	No
9305353	Drain Grate	2" BSP	75(3")	26.5(1-1/16")	-	-	3(1/8")	No
9305351-A	Drain Grate	1-1/2" NPT	75(3")	50(2")	-	-	8(5/16")	Yes
9305352-A	Drain Grate	1-1/2" NPSM	75(3")	26(1-1/16")	-	-	3(1/8")	No
9305353-A	Drain Grate	2" NPSM	75(3")	26.5(1-1/16")	-	-	3(1/8")	No
9405830-1	2" NPSM Thread Adapter with 1-1/2" Barb.							
9405830-2	2" NPSM Thread Adapter with 2" Barb.							
0403436-G	Grate Removal Key for Spoke Type.							

REMOVABLE DECK DRAIN

NEW

Stainless Steel 316

- High density marine-grade stainless steel ensures strength and prevents corrosion.
- Maximum water flow design.
- Removable cap for easy cleaning purposes.
- Cap conceals fasteners for a better appearance.
- Easy installation.
- Low profile elbow for limited space under the deck.
- Screw size #8.

Patented

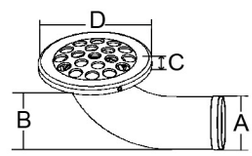

Bulk No.	A mm	B mm	C mm	D mm	Installation Hole
0103586	38(1-1/2")	75(3")	5(3/16")	82(3-1/4")	51(2")
0103588	51(2")	88(3-7/16")	5(3/16")	96.5(3-13/16")	64(2-1/2")

95°STALON SHOWER DECK DRAIN

Stainless Steel 316 Cap & Nylon

- Cost-effective model with deluxe stainless steel appearance.
- Flush mount design with hose barb configured for limited space.
- Removable cap for easy cleaning purposes.
- Cap conceals fasteners for a better appearance.
- Screw size #8.

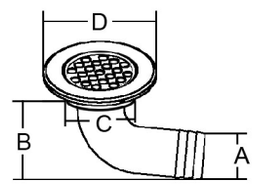

Bulk No.	A mm	B mm	C mm	D mm
9703838	38(1-1/2")	74.5(2-15/16")	63(2-1/2")	90(3-9/16")

95° SHOWER DECK DRAIN

Stainless Steel 316

- Flush mount design with hose barb configured for limited space.
- Screw flange design.
- Screw size #8.

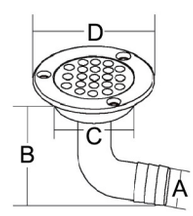

Bulk No.	A mm	B mm	C mm	D mm
9503386	25(1")	63(2-7/16")	44(1-3/4")	68(2-11/16")
9503387	38(1-1/2")	82(3-1/4")	76(3")	98(3-7/8")

HOODED DRAIN

Stainless Steel 316 & Nylon

- Easy installation for anchor wells.
- Hollow nylon head fitting threads into a stainless steel drain scoop.
- Thread length can be cut to fit different thickness.

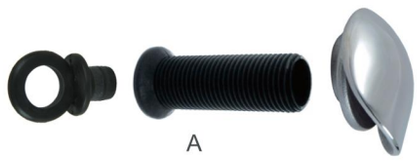

A

9105702

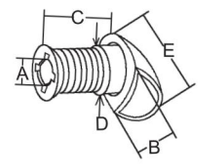

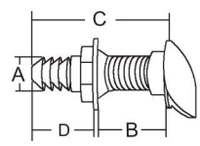

Bulk No.	Model	A mm	B mm	C mm	D mm	E mm
9105660	A W/ Plug	16.5(11/16")	40(1-9/16")	53.5(2-1/8")	25(1")	49(1-15/16")
9004267	A W/O Plug	16.5(11/16")	40(1-9/16")	53.5(2-1/8")	25(1")	49(1-15/16")
9105702	-	19(3/4")	53.5(2-1/8")	96.5(3-13/16")	39(1-9/16")	-

STAMPED SCOOP HEAD

Stainless Steel 316

- Designed as a thru hull drain cover.
- Screw size #8.

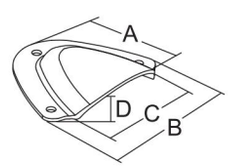

Bulk No.	A mm	B mm	C mm	D mm
0303356	64(2-1/2")	66(2-5/8")	51(2")	15.4(5/8")

MINI THRU HULL

Stainless Steel 304 Drain Tube & Rubber Receptor

Video

- Ideal for cup holder, cleat, rod holder, hatch gutter, deck and ice chest drain.
- The barbed internal rear rubber receptor allows quick fit-up.
- Simply push stainless steel outlet tube into the receptor for assembly. Drainage hose is then attached and hose clamped into place to create a strong and secure connection.

Patented

Complete Assembly

Rubber Receptor

Drain Tube

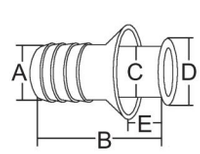

Bulk No.	A mm	B mm	C mm	D mm	E-Max. mm
0203697	10(3/8")	36(1-7/16")	7.8(5/16")	14(9/16")	9(3/8")
0203699	13(1/2")	36(1-7/16")	9.8(3/8")	15.5(5/8")	9(3/8")
9503701	16(5/8")	39(1-1/2")	13(1/2")	19(3/4")	9(3/8")
9503703	19(3/4")	44(1-3/4")	16(5/8")	22(7/8")	9(3/8")
9503705	25(1")	44(1-3/4")	22(7/8")	29(1-1/8")	9(3/8")
0303707	28.5(1-1/8")	82.6(3-1/4")	25.4(1")	35(1-3/8")	44.5(1-3/4")

OVAL DRAIN PLUG

Stainless Steel 316

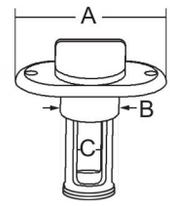

- When in use, plug is captured to prevent loss.
- Plug can be removed for cleaning.
- Allows quick drainage.
- Screw size #8.

Bulk No.	A mm	B mm	C mm
9004266	55(2-3/16")	24(15/16")	12(1/2")
9004269	64(2-1/2")	30.7(1-7/32")	18.5(3/4")

ROUND DRAIN PLUG

Brass

8622401

9305330

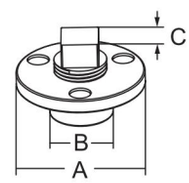

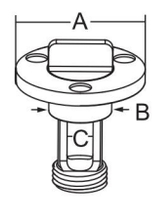

- Allows quick drainage.
- 1/2" NPT threads ensure a watertight fit.
- Screw size #8.

Bulk No.	A mm	B mm	C mm
8622401	50(2")	24.5(15/16")	14.5(9/16")
9305330	50(2")	24.5(15/16")	10(3/8")
8722409	Plug for 8622401		

DRAIN PLUG

Nylon

9004254

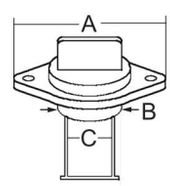

- Nylon base couples to a captured drain plug.
- Screw size #8.

Bulk No.	Model	A mm	B mm	C mm
9004254	Black	54(2-1/8")	24.5(15/16")	12(1/2")
9004268	White	54(2-1/8")	24.5(15/16")	12(1/2")

OVAL DRAIN PLUG

Stainless Steel 316 Base & Nylon

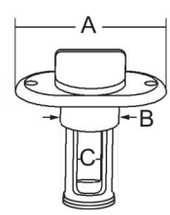

- Stainless steel 316 base with a nylon captured drain plug.
- Screw size #8.

Bulk No.	A mm	B mm	C mm
9004255	55(2-3/16")	24(15/16")	12(1/2")

MEGA FLOW EXHAUST THRU HULL

Stainless Steel 316

- High density marine-grade stainless steel ensures strength and prevents crevice corrosion.
- Includes a durable stainless steel flapper to keep water from seeping into the exhaust system.
- A stainless steel drip collar prevents staining of hull.
- Integrated ground screw on nut.
- Watertight gasket is included.

Patented

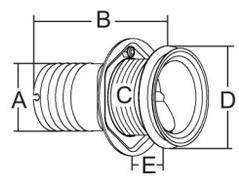

Bulk No.	A mm	B mm	C mm	D mm	E-Max. mm	E-Min. mm
0104861	38.6(1-1/2")	135.5(5-5/16")	57(2-1/4")	77(3")	63.5(2-1/2")	32(1-1/4")
0104863	51.3(2")	106(4-3/16")	57(2-1/4")	77(3")	32(1-1/4")	5(3/16")

EXHAUST THRU HULL

Stainless Steel 316

- Includes a durable stainless steel flapper to keep water from seeping into the exhaust system.
- A stainless steel drip collar prevents staining of hull.
- Flapper insert can be rotated every 45˚ for desired angle.

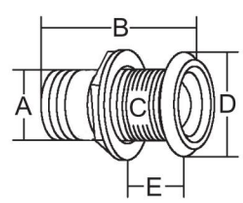

Bulk No.	A mm	B mm	C mm	D mm	E-Max. mm
9205770	64(2-1/2")	146(5-3/4")	88(3-1/2")	117(4-5/8")	33(1-5/16")
9205772	76(3")	146(5-3/4")	88(3-1/2")	117(4-5/8")	33(1-5/16")

25º EXHAUST THRU HULL

Stainless Steel 316

- Includes a durable stainless steel flapper to keep water from seeping into the exhaust system.
- A stainless steel drip collar prevents staining of hull.
- Flapper insert can be rotated every 45º for desired angle.

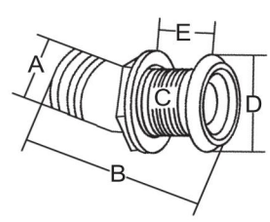

Bulk No.	A mm	B mm	C mm	D mm	E-Max. mm
9405930	51(2")	148(5-13/16")	56(2-1/4")	81(3-3/16")	32(1-1/4")

STANDARD DECK FILL

Stainless Steel 316

- Cap is linked with a spring-loaded security cable.
- Color-coded international symbol with engraved lettering.
- 48mm (1-7/8") installation hole is required for the 38mm (1-1/2") fill.
- 54mm (2-1/8") installation hole is required for the 51mm (2") fill.
- Screw size #10.

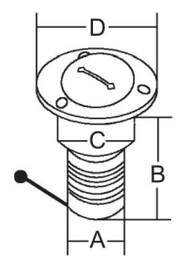

Bulk No.	Model	Angle	A mm	B mm	C mm	D mm
8407016	Water	0°	38(1-1/2")	76(3")	45(1-3/4")	75(3")
8407017	Waste	0°	38(1-1/2")	76(3")	45(1-3/4")	75(3")
8407018	Gas	0°	38(1-1/2")	76(3")	45(1-3/4")	75(3")
8407019	Diesel	0°	38(1-1/2")	76(3")	45(1-3/4")	75(3")
8407020	Fuel	0°	38(1-1/2")	76(3")	45(1-3/4")	75(3")
8907214	Water	0°	51(2")	76(3")	53(2-1/8")	83.5(3-5/16")
8907215	Waste	0°	51(2")	76(3")	53(2-1/8")	83.5(3-5/16")
8907217	Diesel	0°	51(2")	76(3")	53(2-1/8")	83.5(3-5/16")
8907218	Fuel	0°	51(2")	76(3")	53(2-1/8")	83.5(3-5/16")
9007219	Water	30°	38(1-1/2")	90(3-9/16")	45(1-3/4")	75(3")
9007220	Waste	30°	38(1-1/2")	90(3-9/16")	45(1-3/4")	75(3")
9206429	Diesel	30°	38(1-1/2")	90(3-9/16")	45(1-3/4")	75(3")
9007222	Fuel	30°	38(1-1/2")	90(3-9/16")	45(1-3/4")	75(3")
9007250	Water	30°	51(2")	102(4")	53(2-1/8")	83.5(3-5/16")
9007251	Waste	30°	51(2")	102(4")	53(2-1/8")	83.5(3-5/16")
9007253	Diesel	30°	51(2")	102(4")	53(2-1/8")	83.5(3-5/16")
9007254	Fuel	30°	51(2")	102(4")	53(2-1/8")	83.5(3-5/16")
8407019-K	Key Only					

POP-OUT DECK FILL

Stainless Steel 316

- Keyless pop-out cap is linked with a spring-loaded security cable.
- Color-coded international symbol with engraved lettering.
- 48mm (1-7/8") installation hole is required for the 38mm (1-1/2") fill.
- 54mm (2-1/8") installation hole is required for the 51mm (2") fill.
- **For locking cap option, add the letter "-L" after bulk no.**
- Screw size #10.

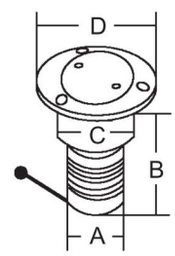

Bulk No.	Model	Angle	A mm	B mm	C mm	D mm
8807201	Water	0°	38(1-1/2")	76(3")	45(1-3/4")	75(3")
8807202	Waste	0°	38(1-1/2")	76(3")	45(1-3/4")	75(3")
8807204	Diesel	0°	38(1-1/2")	76(3")	45(1-3/4")	75(3")
8807205	Fuel	0°	38(1-1/2")	76(3")	45(1-3/4")	75(3")
8907208	Water	0°	51(2")	76(3")	53(2-1/8")	83.5(3-5/16")
8907209	Waste	0°	51(2")	76(3")	53(2-1/8")	83.5(3-5/16")
8907211	Diesel	0°	51(2")	76(3")	53(2-1/8")	83.5(3-5/16")
8907212	Fuel	0°	51(2")	76(3")	53(2-1/8")	83.5(3-5/16")
9007223	Water	30°	38(1-1/2")	90(3-9/16")	45(1-3/4")	75(3")
9007224	Waste	30°	38(1-1/2")	90(3-9/16")	45(1-3/4")	75(3")
9007226	Fuel	30°	38(1-1/2")	90(3-9/16")	45(1-3/4")	75(3")
9007227	Diesel	30°	38(1-1/2")	90(3-9/16")	45(1-3/4")	75(3")
9007256	Water	30°	51(2")	102(4")	53(2-1/8")	83.5(3-5/16")
9007257	Waste	30°	51(2")	102(4")	53(2-1/8")	83.5(3-5/16")
9007259	Diesel	30°	51(2")	102(4")	53(2-1/8")	83.5(3-5/16")
9007260	Fuel	30°	51(2")	102(4")	53(2-1/8")	83.5(3-5/16")

FLUSH TANK VENT

Stainless Steel 316 Body

- Provides flush hull installation.
- High airflow capacity.
- Comes with flame arrestor screen and stainless steel 304 cup.
- Barb up installation to prevent water contamination.
- Model C & D are suitable for thicker hull.

A

B

C
W/ Shallow Cup

D
W/ Shallow Cup

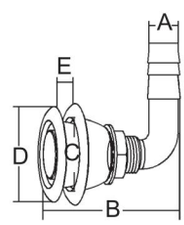

Bulk No	Angle	Model	A mm	B mm	C mm	D mm	E mm
8906220	90°	A	12.7(1/2")	70(2-3/4")	35(1-3/8")	46(1-13/16")	up to 15(5/8")
8906222	90°	A	16(5/8")	70(2-3/4")	35(1-3/8")	46(1-13/16")	up to 15(5/8")
8906223	90°	A	19(3/4")	76(3")	38(1-1/2")	49(1-15/16")	up to 15(5/8")
8906212	0°	B	12.7(1/2")	75(3")	35(1-3/8")	46(1-13/16")	up to 19(3/4")
8906214	0°	B	16(5/8")	75(3")	35(1-3/8")	46(1-13/16")	up to 19(3/4")
8906215	0°	B	19(3/4")	76(3")	38(1-1/2")	49(1-15/16")	up to 19(3/4")
9106270	90°	C	12.7(1/2")	70(2-3/4")	35(1-3/8")	46(1-13/16")	15(5/8")~31(1-1/4")
9106272	90°	C	16(5/8")	70(2-3/4")	35(1-3/8")	46(1-13/16")	15(5/8")~31(1-1/4")
9106273	90°	C	19(3/4")	76(3")	38(1-1/2")	49(1-15/16")	15(5/8")~31(1-1/4")
9106262	0°	D	16(5/8")	75(3")	35(1-3/8")	46(1-13/16")	15(5/8")~35(1-3/8")
9106263	0°	D	19(3/4")	76(3")	38(1-1/2")	49(1-15/16")	15(5/8")~35(1-3/8")

THRU HULL TANK VENT

Stainless Steel 316

- High airflow capacity.
- Comes with flame arrestor screen.
- Barb up installation to prevent water contamination.

8906216

8906208

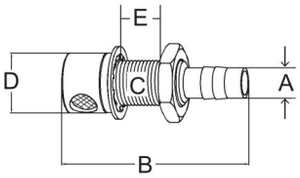

Bulk No.	Angle	A mm	B mm	C mm	D mm	E-Max. mm
8906208	0°	12.7(1/2")	75(3")	19(3/4")	25(1")	18(3/4")
8906216	90°	12.7(1/2")	75(3")	19(3/4")	25(1")	18(3/4")

STALON TANK VENT

Stainless Steel 316 & Nylon Cup

- Provides flush hull installation.
- Comes with flame arrestor screen.
- Uses a nylon backing cup and nut to save cost without compromising the vent integrity.
- Retains the stainless steel external appearance.

9106364

9106353

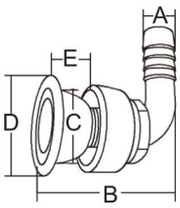

Bulk No.	Angle	A mm	B mm	C mm	D mm	E mm
9106353	0°	16(5/8")	75(3")	35(1-3/8")	46(1-13/16")	up to 18(3/4")
9106364	90°	16(5/8")	70(2-3/4")	35(1-3/8")	46(1-13/16")	up to 16(5/8")

P-TRAP TANK VENT ADAPTER

Nylon

- The nylon P-trap is designed to be used with a 16mm (5/8") 90° tank vent.
- The P-trap eliminates the need to loop the vent hose.

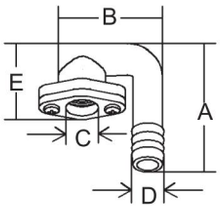

Bulk No.	A mm	B mm	C mm	D mm	E mm
9006229	70(2-3/4")	53(2")	16.5(5/8")	16.4(5/8")	36.3(1-3/8")

X-FOLDING CLEAT

Stainless Steel 316

- Push down for low profile appearance when not in use to prevent accidental catching of lines.
- No need for water drainage.
- Smooth edge avoids rope chafing or causing foot injury.
- Special modern "X" design.
- Washers and nuts are included.

Patented

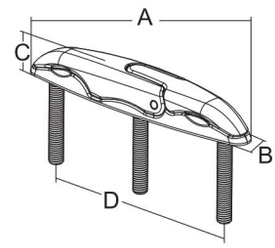

Bulk No.	A mm	B mm	C mm	D mm	Stud Size
9806496	152.4(6")	26.5(1-1/16")	22(7/8")	120(4-3/4")	M8 or 5/16" x L:50(2")

PULL UP FOLDING CLEAT

Stainless Steel 316

- Easy installation.
- Fold down for low profile appearance when not in use to prevent accidental catching of lines.
- No need for water drainage.
- Smooth edge avoids rope chafing or causing foot injury.

Screw Type

Stud Type

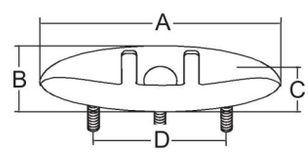

Bulk No.	Model	A mm	B mm	C mm	D mm	Screw / Stud size	Middle Fastener
9806466	Screw	155(6")	54.7(2-1/8")	13.5(9/16")	85.5(3-3/8")	M8 or 5/16"	M4 or #8
9806468	Screw	202(8")	72.6(2-7/8")	15(5/8")	114(4-1/2")	M10 or 3/8"	M5 or #10
9806476	Stud	155(6")	54.7(2-1/8")	13.5(9/16")	85.5(3-3/8")	M8 or 5/16" x L:50(2")	
9806478	Stud	202(8")	72.6(2-7/8")	15(5/8")	114(4-1/2")	M10 or 3/8" x L:62(2-7/16")	

PULL UP FLAT CLEAT

Stainless Steel 316

- Flush appearance that covers entire cleat base when stowed.
- Aluminum backing plate, lock washers and nuts are included.
- Anti-rattle design.

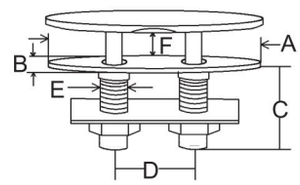

Bulk No.	A mm	B mm	C mm	D mm	E mm	F mm	Grip mm
9218730	108(4-1/4")	28(1-1/8")	49.5(1-15/16")	45(1-3/4")	19(3/4")	19.5(3/4")	1.5~17(1/16"~7/16")
9218732	146(5-3/4")	34(1-3/8")	60(2-3/8")	57(2-1/4")	22(7/8")	26(1")	3.5~23(1/8"~7/8")
9218734	202(8")	37(1-1/2")	71(2-3/4")	70(2-3/4")	25(1")	31(1-1/4")	4.5~27(3/16"~1-1/16")
9218736	250(9-13/16")	46(1-13/16")	94(3-3/4")	87(3-7/16")	31(1-1/4")	38(1-1/2")	6~43(1/4"~1-11/16")

SWALLOW CLEAT BOSS TYPE

Stainless Steel 316

- Aluminum backing plate is included for 9618620/2.

W/O Backing Plate

W/ Aluminum Backing Plate

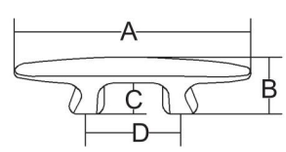

Bulk No.	Model	A mm	B mm	C mm	D mm	Screw Size
9518830	W/O Backing Plate	254(10")	60(2-3/8")	42(1-5/8")	98.5(3-7/8")	M12 or 1/2"
9518832	W/O Backing Plate	305(12")	72(2-13/16")	51(2")	119(4-11/16")	M16 or 5/8"
9618620	W/ Backing Plate	254(10")	60(2-3/8")	42(1-5/8")	98.5(3-7/8")	M12 or 1/2"
9618622	W/ Backing Plate	305(12")	72(2-13/16")	51(2")	119(4-11/16")	M16 or 5/8"

STANDARD CLEAT

Stainless Steel 316

- Bright polished finish with investment cast construction.

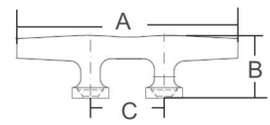

Bulk No.	A mm	B mm	C mm	Screw Size	Weight
2310004	102(4")	29(1-1/8")	34(1-5/16")	#12	106g / 0.23lb
2350006	152(6")	32.5(1-5/16")	57(2-1/4")	#14	204g / 0.45lb
2360008	203(8")	40.5(1-9/16")	72(2-7/8")	#14	336g / 0.74lb
2370010	254(10")	47.5(1-7/8")	93(3-11/16")	5/16"	632g / 1.39lb
2380012	304(12")	54(2-1/8")	100(4")	5/16"	915g / 2.02lb

HEAVY DUTY CLEAT

Stainless Steel 316

- Bright polished finish with investment cast construction.

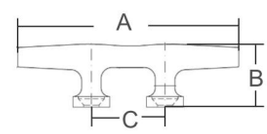

Bulk No.	A mm	B mm	C mm	Screw Size	Weight
2400110	201(7-15/16")	51(2")	83(3-1/4")	#14	679g / 1.51lb
2410111	254(10")	62.5(2-7/16")	95(3-3/4")	5/16"	1145g / 2.52lb
2420112	305(12")	72(2-7/8")	122(4-13/16")	5/16"	1801g / 3.97lb

STUD CLEAT

Stainless Steel 316

- Bright polished finish with investment cast construction.
- Comes with stainless steel 304 studs & nuts, and aluminum backing plate.

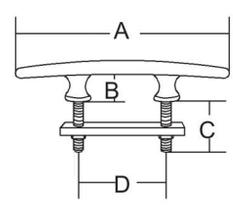

Bulk No.	A mm	B mm	C mm	D mm	Stud Ø
8828200	152(6")	19(3/4")	38(1-1/2")	62.5(2-7/16")	5/16"-18T
9318609	177(7")	25(1")	43(1-11/16")	70(2-3/4")	5/16"-18T
8828201	203(8")	25(1")	50(2")	83(3-1/4")	3/8"-16T
8828202	254(10")	31(1-1/4")	65(2-9/16")	103(4-1/16")	1/2"-13T

STRAIGHT CHOCK

Stainless Steel 316

- Bright polished finish with investment cast construction.

Bulk No.	A mm	B mm	Screw Size	Weight
2490082	128(5")	23(15/16")	#10	265g / 0.58lb
2500083	152(6")	25(1")	#14	284g / 0.63lb

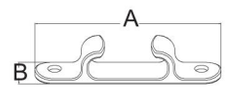

BOW CHOCK

Stainless Steel 316

- Bright polished finish with investment cast construction.
- Sold in pairs.

Bow Chock

Skene Bow Chock

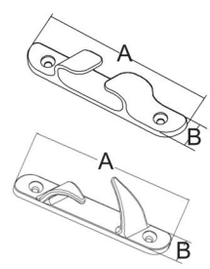

Bulk No.	Model	A mm	B mm	Screw Size
2470013	Bow Chock	120(4-3/4")	20(3/4")	#10
2480030	Bow Chock	155(6-1/8")	25(1")	#14
2450113	Skene Bow Chock	112(4-3/8")	19(3/4")	#10

U-BOLT LIFT CLEAT

Stainless Steel 316

- Designed to mount on the back side of the stern eye.
- Can also be used as a lifting eye.

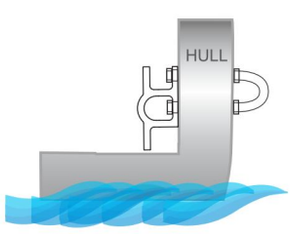

9118802

9026286

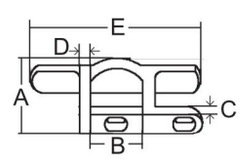

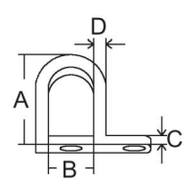

Bulk No.	A mm	B mm	C mm	D mm	E mm	Bolt Size
9118802	61.7(2-7/16")	37(1-1/2")	8(5/16")	10(3/8")	126.4(5")	M6 or 1/2"
9026286	62(2-7/16")	37(1-1/2")	8(5/16")	10(3/8")	-	M6 or 1/2"

DELUXE BOW EYE

Stainless Steel 304

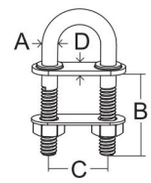

- Welded and polished face plate to reduce potential rust.
- Upgraded quality appearance.
- 3mm (1/8") thick face plate.

Bulk No.	A mm	B mm	C mm	D mm
9026293	9.5(3/8")	63(2-7/16")	36(1-7/16")	19(3/4")
9026313	12.7(1/2")	113(4-7/16")	46(1-13/16")	19(3/4")
9026316	16(5/8")	138(5-7/16")	48(1-7/8")	25(1")

DELUXE STERN EYE

Stainless Steel 304

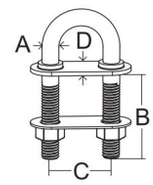

- Welded and polished face plate to reduce potential rust.
- Upgraded quality appearance.

Bulk No.	A mm	B mm	C mm	D mm	Face Plate Thickness
9026292	12.7(1/2")	88(3-7/16")	46(1-13/16")	30(1-3/16")	3mm(1/8")
9026315	16(5/8")	138(5-7/16")	48(1-7/8")	38(1-1/2")	2mm(1/16")

HEAVY DUTY STERN EYE

Stainless Steel 304

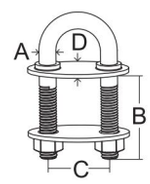

- Welded and polished face plate to reduce potential rust.
- Upgraded quality appearance.
- 3mm (1/8") thick face plate.

Bulk No.	A mm	B mm	C mm	D mm
9107722	12.7(1/2")	76(3")	46(1-13/16")	43(1-11/16")

HEAVY DUTY STERN EYE

Stainless Steel 304

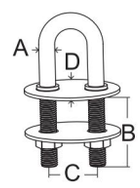

- Welded and polished face plate to reduce potential rust.
- Upgraded quality appearance.
- 4mm (3/16") thick face plate.

Bulk No.	A mm	B mm	C mm	D mm
9107726	16(5/8")	75(2-15/16")	48(1-7/8")	83(3-1/4")
9107727	16(5/8")	140(5-1/2")	48(1-7/8")	83(3-1/4")

FLAG POLE SOCKET

Stainless Steel 316

- Captive screw knob for tightening the flag pole.
- Screw size #10.

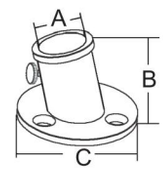

Bulk No.	A mm	B mm	C mm
8810217	25.6(1")	45(1-3/4")	65(2-9/16")
8810218	32(1-1/4")	48(1-7/8")	68(2-11/16")

60º FLUSH FLAG POLE SOCKET

Stainless Steel 316

- Low profile.
- Screw size #10.

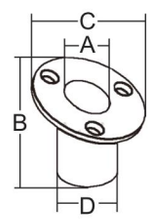

Bulk No.	A mm	B mm	C mm	D mm
9011203	25.6(1")	72(2-7/8")	62(2-7/16")	32(1-1/4")
8514170	32(1-1/4")	75(3")	71(2-13/16")	37(1-7/16")

RAIL MOUNT FLAG POLE SOCKET

Stainless Steel 316

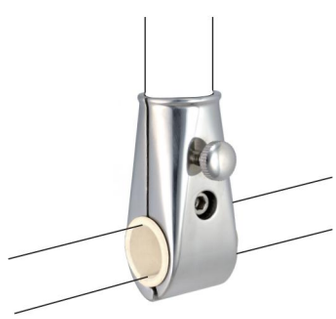

- Uses hex-screw for mounting rail.
- Comes with a captive knob for tightening the flag pole.
- Comes with rubber insert to fit 22mm (7/8") rail, and can remove it to fit 25mm (1") rail.

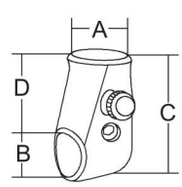

Bulk No.	A mm	B mm	C mm	D mm
9706393	13(1/2")	22(7/8") & 25(1")	80(3-1/8")	47(1-7/8")
9210301	25.4(1")	22(7/8") & 25(1")	80(3-1/8")	47(1-7/8")

MAG. FLAG POLE

Stainless Steel 304

- Pole can be secured in magnetic socket during rough weather.
- Removable pole for convenient storage.
- 9507576-S comes with an open ring.

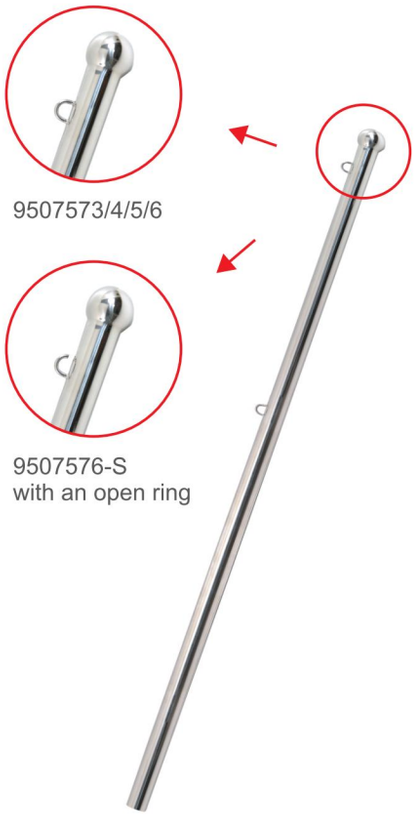

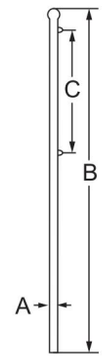

Bulk No.	A mm	B mm	C mm
9507573	25(1")	610(24")	305(12")
9507574	25(1")	762(30")	406(16")
9507575	25(1")	852(33-9/16")	368(14-1/2")
9507576	25(1")	1032(40-5/8")	368(14-1/2")
9507576-S	25(1")	1032(40-5/8")	590(23-1/4")

MAG. FLAG POLE SOCKET

Stainless Steel 316

- The base magnetically locks the flag pole.
- 15° mounting angle.
- Screw size #8.

9507583

9507583-A

9706413

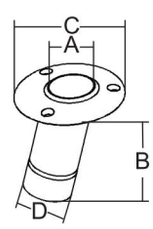

Bulk No.	Model	A mm	B mm	C mm	D mm
9507583	Flush Mount	25.5(1")	75(2-15/16")	70(2-3/4")	31.3(1-1/4")
9507583-A	5/8" Drain Barb Adapter for 9507583				
9706413	Top Mount	25.5(1")	63(2-1/2")	68(2-11/16")	

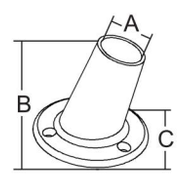

STREAMLINE FLAG POLE

Stainless Steel 304

- Tapered flag pole with fastening rings to fit most popular flag sizes.

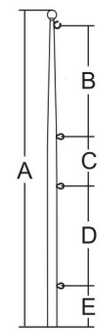

Bulk No.	Dia. mm	A mm	B mm	C mm	D mm	E mm
9011205	19(3/4”)	610(24")	196(7-3/4")	100(3-15/16")	202(7-15/16")	83(3-1/4")

RAIL MOUNT PENNANT STAFF

Stainless Steel 316 Hinged Rail Clamp

- Stainless steel 304 staff comes with a heavy duty stainless steel 316 hinged rail clamp.
- Quick-release adjustable flag clips are included.

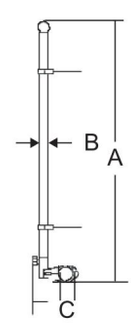

Bulk No.	A mm	B mm	C mm
8933088	450(17-3/4")	12.7(1/2")	22(7/8")
8933089	452(17-13/16")	12.7(1/2")	25.4(1")
8933090	455(17-15/16")	12.7(1/2")	32(1-1/4")

HEAVY DUTY FINGERGRIP HANDLE

Stainless Steel 316

- Heavy duty solid cast construction.

9715682

9715684

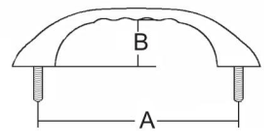

Bulk No.	Model	A mm	B mm	Screw/ Stud Size
9715682	Screw	141(5-9/16")	32(1-1/4")	M6 or 1/4"
9715684	Stud	141(5-9/16")	32(1-1/4")	M6 or 1/4" x L:37mm(1-7/16")

GRAB HANDLE

Stainless Steel 316

- 0206151: Hollow construction with cast ends.
- Welded and polished base design for stud type grab handle.

0206151

Stud Type

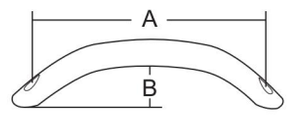

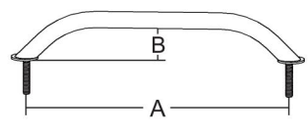

Bulk No.	Thread	A mm	B mm	Screw/ Stud Size
0206151	-	192(7-9/16")	38(1-1/2")	M6 or 1/4".
9024275	Metric	219(8-5/8")	38(1-1/2")	M8 x L:44.5mm(1-3/4")
9024271	Metric	305(12")	38(1-1/2")	M8 x L:44.5mm(1-3/4")
9024305	Metric	338(13-5/16")	38(1-1/2")	M8 x L:44.5mm(1-3/4")
9024274	Metric	610(24")	38(1-1/2")	M8 x L:44.5mm(1-3/4")
9024275-A	Inch	219(8-5/8")	38(1-1/2")	5/16" x L:44.5mm(1-3/4")
9024271-A	Inch	305(12")	38(1-1/2")	5/16" x L:44.5mm(1-3/4")
9024305-A	Inch	338(13-5/16")	38(1-1/2")	5/16" x L:44.5mm(1-3/4")
9024274-A	Inch	610(24")	38(1-1/2")	5/16" x L:44.5mm(1-3/4")

GRAB HANDLE

Stainless Steel 316

- Heavy duty grab handle.
- Screw size #14.

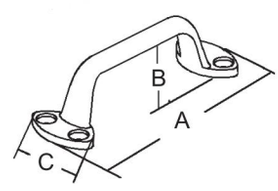

Bulk No.	A mm	B mm	C mm
8812205	150(6")	32(1-1/4")	48(1-7/8")

FOLDAWAY PAD EYE

Stainless Steel 316

- Strong yet compact oval base with countersink screw holes.
- Friction hinged eye stays in position.
- Anti-rattle.
- Screw size 1/4".

9706385

9706388

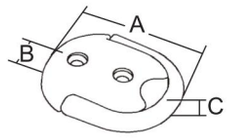

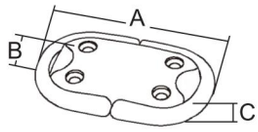

Bulk No.	A mm	B mm	C mm	SWL
9706385	70(2-3/4")	12(1/2")	11(7/16")	600kg / 1322lb
9706388	100(3-15/16")	12(1/2")	11(7/16")	900kg / 1984lb

DECK PLATE

- The rubber o-ring provides a watertight seal.
- Easy opening and self-cleaning thread.
- UV resistant for nylon type.
- 9026398 is sold separately.

Nylon

S.S.316

9026398

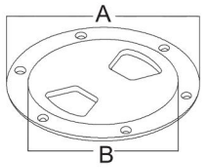

Bulk No.	Model	A mm	B mm	Screw Size
8421029	Nylon	146(5-3/4")	113(4-1/2")	#8
8421030	Nylon	203(8")	164.5(6-1/2")	#8
9026400	S.S.316	90(3-9/16")	59(2-5/16")	#6
9026401	S.S.316	114(4-1/2")	84(3-5/16")	#6
9026402	S.S.316	146(5-3/4")	110(4-5/16")	#6
9026398	S.S.304 Deck Plate Key			

Warranty * 1lb of anchor to be used on 1 feet boat, within(+/-10%).
* Damage by deformation or bending is not covered by this guarantee.

MANTA ANCHOR

Stainless Steel 316 Cast

- Bruce style anchor.
- Attractive streamline profile.
- Bright polished finish.
- Unique design of chamfered edge on shank.
- Built-in Swivel Anchor Connector.
- Effortless and quick setting.
- Works perfectly well with Manta self-launching anchor rollers.
- Superior holding power.
- Holds well in sand and rock bottoms.
- Loctite on screw is required after installation.

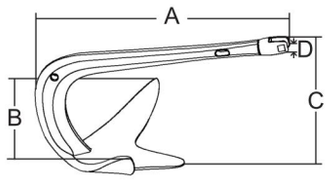

Bulk No.	Weight	A mm	B mm	C mm	D mm
NMA-011	5kg / 11lb	410(16-1/8")	280(11")	254(10")	16.5(5/8")
NMA-165	7.5kg / 16.5lb	509(20")	341(13-7/16")	304(12")	20(13/16")
NMA-022	10kg / 22lb	566(22-1/4")	387(15-1/4")	345(13-9/16")	20(13/16")
NMA-033	15kg / 33lb	659(25-15/16")	443(17-7/16")	387(15-1/4")	22(7/8")

MANTA ANCHOR ROLLER

Stainless Steel 316 Cast

- One piece construction with bail.
- Double wheels design.
- The forward tabs rest against Manta Anchor when stowed.
- Security pin stows Manta Anchor safely while cruising, and takes away tension from windlass.
- Heavy duty channel construction.

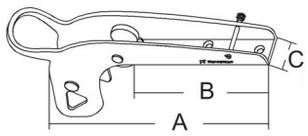

Bulk No.	Fits	A mm	B mm	C mm	Screw Size
NMR-011	NMA-011	379(14-15/16")	215(8-1/2")	55(2-3/16")	M8 or 5/16"
NMR-165	NMA-165	449(17-11/16")	260(10-1/4")	55(2-3/16")	M8 or 5/16"
NMR-022	NMA-022	482(19")	275(10-13/16")	59(2-5/16")	M10 or 3/8"
NMR-033	NMA-033	561(22-1/8")	326(12-7/8")	69(2-3/4")	M10 or 3/8"

Warranty * 1lb of anchor to be used on 1 feet boat, within(+/-10%).
* Damage by deformation or bending is not covered by this guarantee.

ORCA ANCHOR

Stainless Steel 316 Cast

- Danforth style anchor.
- Bright polished finish.
- Unique design of chamfered edge on shank.
- Built-in Swivel Anchor Connector.
- Heavy crown provides deeper penetration, and keeps the fluke at a desired angle.
- The wide fluke is a one piece cast construction that produces outstanding holding power.
- Holds well both in sand and mud bottoms.
- Loctite on screw is required after installation.

Patented

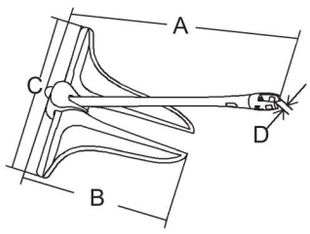

Bulk No.	Weight	A mm	B mm	C mm	D mm
NOA-014	6.3kg / 14lb	603(23-3/4")	376(14-13/16")	450(17-11/16")	20(13/16")
NOA-022	10kg / 22lb	711(28")	443(17-7/16")	531(20-7/8")	20(13/16")
NOA-033	15kg / 33lb	796(31-3/8")	501(19-3/4")	603(23-3/4")	22(7/8")

ORCA ANCHOR ROLLER

Stainless Steel 316 Cast

- One piece construction with bail.
- The forward tabs rest against the flukes when stowed.
- Makes dropping and weighing anchor easier.
- Security pin stows Orca Anchor safely while cruising, and takes away tension from windlass.
- Strong channel construction.

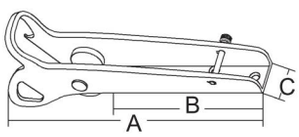

Bulk No.	Fits	A mm	B mm	C mm	Screw Size
NOR-014	NOA-014	435(17-1/8")	270(10-5/8")	55(2-3/16")	M10 or 3/8"
NOR-022	NOA-022	513(20-3/16")	305(12")	65(2-9/16")	M10 or 3/8"
NOR-033	NOA-033	583(22-15/16")	350(13-3/4")	69(2-3/4")	M10 or 3/8"

ANCHOR CONNECTOR

Stainless Steel 316

- Easy to pull anchor over bow roller.
- Captured pins will not loosen when under load.
- Pins can be removed by using an allen wrench.
- Loctite on screws is required after installation.

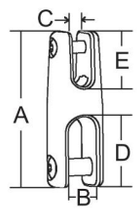

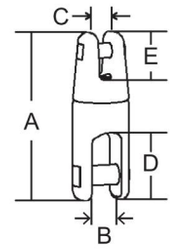

Bulk No.	Model	A mm	B mm	C mm	D mm	E mm	S.W.L.
NDH-AC-09-F	Fixed Type	78(3-1/16")	15(9/16")	9(3/8")	35(1-3/8")	22(7/8")	850kg / 1873lb
NDH-AC-13-F	Fixed Type	90(3-1/2")	22(7/8")	13(1/2")	41(1-5/8")	24(1")	1350kg / 2976lb
NDH-AC-09-S	Single Swivel	84(3-5/16")	16(5/8")	9(3/8")	36(1-7/16")	22(7/8")	850kg / 1873lb
NDH-AC-13-S	Single Swivel	96(3-3/4")	22(7/8")	13(1/2")	40(1-9/16")	25(1")	1350kg / 2976lb
NDH-AC-17-S	Single Swivel	151(6")	26(1")	16(5/8")	53(2-1/16")	42(1-5/8")	1700kg / 3747lb

ANCHOR CONNECTOR - DOUBLE SWIVEL

Stainless Steel 316

- Same construction as Anchor Connector but with double swivel which prevents the chain from twisting.
- Loctite on screws is required after installation.

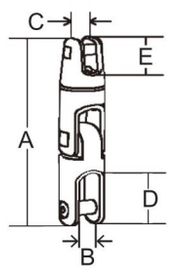

Bulk No.	A mm	B mm	C mm	D mm	E mm	S.W.L.
NDH-AC-09-D	135(5-5/16")	16(5/8")	9(3/8")	36(1-7/16")	22(7/8")	850kg / 1873lb
NDH-AC-13-D	158(6-1/4")	22(7/8")	13(1/2")	40(1-9/16")	25(1")	1350kg / 2976lb

ROPE ANCHOR CONNECTOR

Stainless Steel 316

- Designed for using rope instead of chain.
- Captured pins will not loosen when under load.
- Pins can be removed by using an allen wrench.
- Loctite on screws is required after installation.

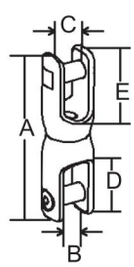

Bulk No.	A mm	B mm	C mm	D mm	E mm	S.W.L.
NDH-AC-16-R	100(4")	16(5/8")	16(5/8")	37(1-7/16")	37(1-7/16")	1300kg / 2866lb

CHAIN STOPPER

Stainless Steel 316

- Designed to take tension off your windlass while boat is at anchor.
- Handles 1/4" to 5/16" chain.
- Mounting base: (L) 62mm (2-7/16") x (W) 62mm (2-7/16").
- Pin Ø: 9mm (3/8").
- Screw size #14.

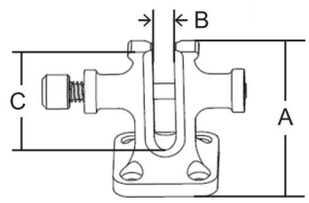

Bulk No.	A mm	B mm	C mm
8631424-8	86.5(3-3/8")	13(1/2")	67(2-5/8")

FENDER HOOK

Stainless Steel 316

- Sold in pairs.
- Screw size #8.

8631406
8631407

9029201

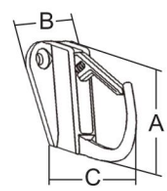

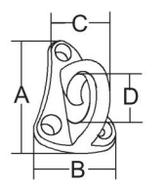

Bulk No.	A mm	B mm	C mm	D mm
8631406	42(1-5/8")	29(1-1/8")	32(1-1/4")	-
8631407	38(1-1/2")	33(1-5/16")	24(1")	-
9029201	50(2")	34(1-5/16")	29(1-1/8")	17(11/16")

FENDER LOCK

Stainless Steel 316

- Rotates disc 180° to remove or attach fender eye from mounting base.
- The locking disc allows the use of up to 1/2" diameter fender line.
- The base comes with a drain hole.
- Concealed fasteners.
- Sold in pairs.
- Screw size #8.

INSTRUCTION

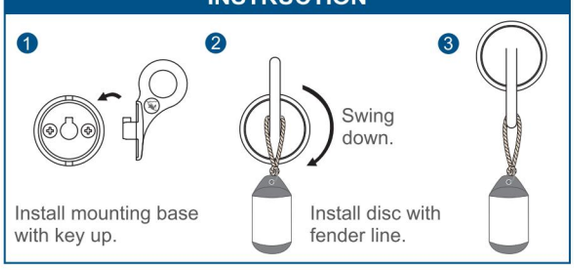

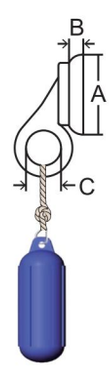

Bulk No.	A mm	B mm	C mm	Fender
9312512	40.5(1-5/8")	8(5/16")	16(5/8")	4"~10"

SURFACE MOUNT FENDER HOOK

NEW

Stainless Steel 316

- Concealed fasteners.
- One-hand operation.
- Can be installed with machine or self tapping screws.
- Spring loaded hook secures the line firmly.
- Screws size #8 or M4 flat head.
- Customized logo on the surface of 0508587 is available upon request.

Patented

0508587

0408585

Video

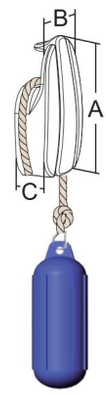

INSTRUCTION

1.
#8 or M4 flat head fasteners.

2.
Pull line loop down to install.

3.
Lift line up and pull to remove.

Bulk No.	Model	A mm	B mm	C mm	Fender Line Ø
0408585	Oval	53(2-1/16")	32(1-1/4")	16.5(5/8")	6~10(1/4"~3/8")
0508587	Round	36(17/16")	36(17/16")	16(5/8")	6~10(1/4"~3/8")

PULL UP FENDER HOOK

NEW

Stainless Steel 316

- Clean and elegant design.
- Designed to fit different line sizes.
- Pull and turn the knob to position, allowing quick and effortless work on attaching or removing fenders.
- Spring loaded hook for line security.
- Customized logo on knob is available upon request.

Patented

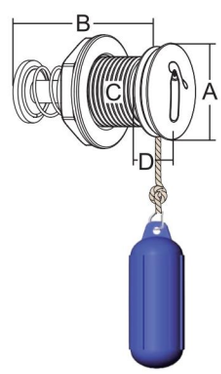

Bulk No.	A mm	B mm	C mm	D mm	Fender Line Ø
0308381	34(1-5/16")	51(2")	25(1")	8(5/16")	6~8(1/4"~5/16")
0308382	47(1-7/8")	71.5(2-13/16")	34.5(1-3/8")	10.5(7/16")	8~13(5/16"~1/2")

LINE MOUNT FENDER HOOK

Nylon

- Provides quick and easy way to fasten fenders to lifelines.
- Sold in pairs.

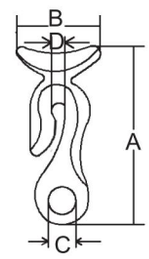

Bulk No.	A mm	B mm	C mm	D mm
8812208	84(3-5/16")	37(1-1/2")	11(7/16")	8.5(5/16")

RAIL MOUNT FENDER HOOK

Nylon

- Provides quick and easy way to fasten fenders to rails.
- Sold in pairs.

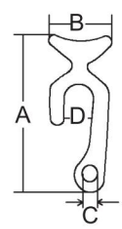

Bulk No.	A mm	B mm	C mm	D mm
8812209	81(3-3/16")	37(1-1/2")	8.5(5/16")	21(7/8")

FENDER BRACKET

Nylon

- Clamp securely to 7/8" and 1" rails, or up to 1/4" lifelines.
- Double locking clamp design allows easy adjustment on fender height.
- Sold in pairs.

INSTRUCTION

Fit 7/8" rail

Fit 1" rail.

Fit up to 1/4" lifeline.

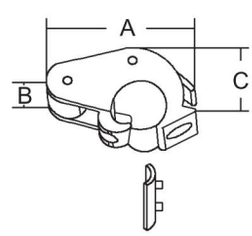

Bulk No.	Rail	A mm	B mm	C mm
8810219	22mm(7/8") or 25mm(1")	70(2-3/4")	31(1-1/4")	43(1-5/8")

MOORING SNUBBER

NBR

- Highly elastic mooring snubber stretches to absorb shock loads on dock lines.
- Nylon rib inside strengthens the ends.

Bulk No.	Rope Ø mm	A mm	B mm	C mm
8809221	6~12(1/4"~1/2")	437(17-3/16")	86(3-3/8")	26(1")
8809222	12~15(1/2"~5/8")	500(19-11/16")	106(4-3/16")	32.5(1-5/16")
9508252	15~17(5/8"~11/16")	565(22-1/4")	126(4-15/16")	39(1-9/16")

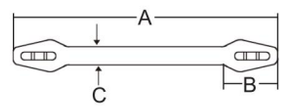

MOORING HOOK

NEW

Stainless Steel 316

- Easy for attaching and retrieving mooring lines from buoy.
- Working loads at 395kg / 870lb.

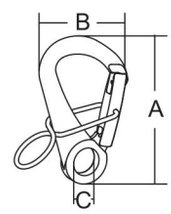

Bulk No.	A mm	B mm	C mm
0508366	108(4-1/4")	63(2-1/2")	20(3/4")

FOLDING STEP

Stainless Steel 316

- Spring loaded step.
- Oversized step pad.
- Folds flat when not in use.
- Screw size #14.

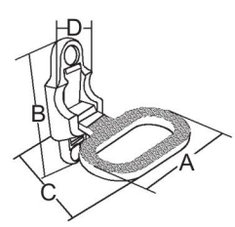

Bulk No.	A mm	B mm	C mm	D mm
8414003	111(4-3/8")	124(4-7/8")	100(4")	49.5(1-15/16")

RAIL MOUNT ROD HOLDER

Stainless Steel 316 Clamp & Nylon Liner

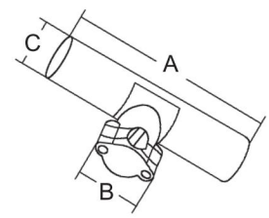

- Fits 1" rails.
- Adjustable to any desired angle.
- Easy clamp-on design.
- Full black nylon liner protects the fishing rod against the stainless steel surface.
- Installation instruction: Tighten both screws alternately.

Bulk No.	A mm	B mm	C mm
8829203	214(8-7/16")	69(2-3/4")	42(1-5/8")

DELUXE ROD HOLDER

Stainless Steel & Nylon Liner

- Heavy duty stainless steel 316 cast flange.
- Full nylon liner with 3/4" NPT thread at the bottom.
- 9122738 is sold separately.
- Screw size #14.

9122738

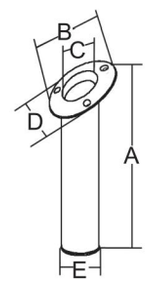

Bulk No.	Angle	A mm	B mm	C mm	D mm	E mm
8929204	0°	210(8-1/4")	107(4-3/16")	42(1-5/8")	85(3-3/8")	51(2")
8929205	15°	223(8-3/4")	107(4-3/16")	42(1-5/8")	88(3-1/2")	51(2")
8929206	30°	247(9-3/4")	107(4-3/16")	42(1-5/8")	90(3-9/16")	51(2")
8929207	30° W/ Cap	247(9-3/4")	107(4-3/16")	42(1-5/8")	90(3-9/16")	51(2")
9122738	5/8" Nylon Drain Adapter, I.D.51mm (2")					

30º ROD HOLDER

Nylon & Stainless Steel 304 Cover

- Injection molded nylon rod holder with cap.
- 9122720 comes with stainless steel cover to hide the fasteners.
- Screw size #1/4".

9122720 9122725

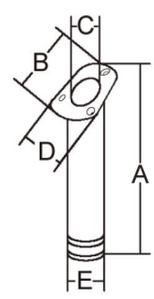

Angle	A mm	B mm	C mm	D mm	E mm
9122720	278.5(11")	102(4")	46(1-13/16")	90(3-9/16")	53(2-1/16")
9122725	278.5(11")	102(4")	46(1-13/16")	90(3-9/16")	53(2-1/16")

TRIM RING

NEW

Stainless Steel 316

- A brilliant and easy solution to finish off the PVC storage tubes of fishing pole.
- Deluxe appearance.
- Stamped construction prevents crevice corrosion.

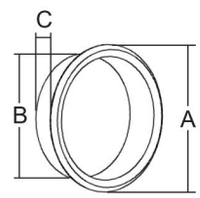

Bulk No.	A mm	B mm	C mm	PVC Pipe
0310330	58.5(2-5/16")	51(2")	13.5(1/2")	1-1/2" SCH20
0310332	72(2-7/8")	63(2-1/2")	16.5(5/8")	2" SCH20

FISHING ROD STORAGE COVER

NEW

Stainless Steel 316

- Stainless steel cover for fishing rod storage.
- Strengthens the plastic flange for long term use.
- Deluxe appearance.
- Screw size #6.

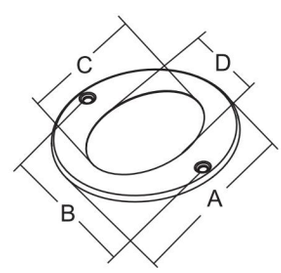

Bulk No.	A mm	B mm	C mm	D mm
0310326	86.2(3-3/8")	73(2-7/8")	57(2-1/4")	43(1-11/16")
0310328	101.3(4")	88(3-1/2")	72(2-13/16")	55(2-3/16")

FOLDING HOOK

Stainless Steel 316

- Compact design.
- Folds flat when not in use.
- Screw size #8.

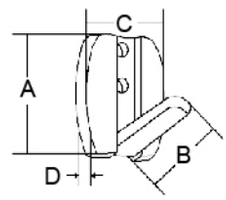

Bulk No.	A mm	B mm	C mm	D mm
9014201	50(2")	50(2")	28(1-1/8")	14(9/16")

SWIVEL COAT HOOK

Stainless Steel 316

- Fits easily in tight corners and folds flat when not in use.
- Screw size #10.

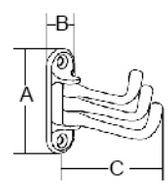

Bulk No.	A mm	B mm	C mm
9711538	75(3")	25(1")	106(4-3/16")

GEORGE FOLDING DRINK HOLDER

Plastic W/ Stainless Steel 304 Cover

- Folds flat when not in use.
- Screw size #8.

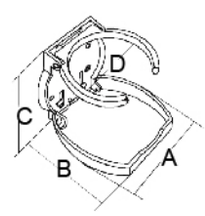

Bulk No.	A mm	B mm	C mm	D mm
9511716	95(3-3/4")	94(3-5/8")	94(3-5/8")	70(2-3/4")

ROLL BACK BOLSTER HINGE

Stainless Steel 304

- New "no pinch finger" design.
- Heavy duty marine-grade stainless steel construction.
- Bolster can be lifted and positioned.
- Screw size 1/4".
- Sold in pairs.

Patented

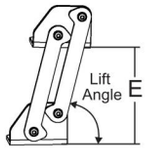

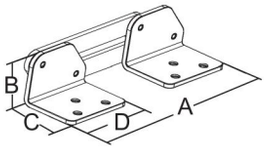

Bulk No.	Lift Angle	A mm	B mm	C mm	D mm	E mm
9914370	62°	211(8-5/16")	62(2-7/16")	57(2-1/4")	76.5(3")	110(4-5/16")
9914371	76°	211(8-5/16")	62(2-7/16")	57(2-1/4")	76.5(3")	129(5-1/16")

ARM REST BRACKET

Stainless Steel 304

- Incorporates arm rest and position pin.
- Heavy duty marine-grade stainless steel construction.
- Screw size 1/4".

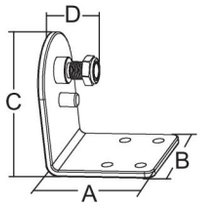

Bulk No.	Screw Hole	A mm	B mm	C mm	D mm
0411690	Straight Hole	79.5(3-1/8")	70(2-3/4")	95(3-3/4")	37(1-7/16")
0411690-8	Countersink Hole	79.5(3-1/8")	70(2-3/4")	95(3-3/4")	37(1-7/16")

"L" SEAT BACK SUPPORT

Stainless Steel 304

- Heavy duty marine-grade stainless steel construction.
- 103° support angle.
- Screw size 1/4".

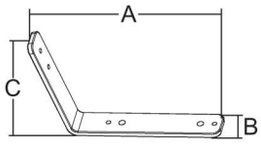

Bulk No.	A mm	B mm	C mm
9711356	307.8(12-1/8")	50(2")	196.9(7-3/4")

DELUXE TIE DOWN

Stainless Steel 316 Buckle & Nylon Webbing

- Easy push release lever buckle.
- 9114704: Comes with a webbing 25mm (1") x 230cm (90-9/16").
- 9114704: Sold in pairs.

9114705

9114704

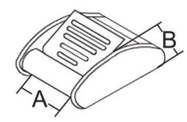

Bulk No.	Model	A mm	B mm
9114704	Complete Kit	-	-
9114705	Buckle Only	28(1-1/8")	16(5/8")

SWIVEL WEBBING BUCKLE KIT

Stainless Steel 316 & Nylon Webbing

- 9114707: Incorporates a quick disconnect pin by rotating buckle 180°, and comes with a webbing 25mm (1") x 230cm (90-9/16").
- Screw size #10.

9114707

8928263

9114706

9314631

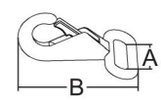

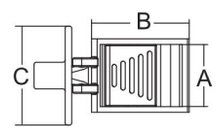

Bulk No.	Model	A mm	B mm	C mm	D mm	E mm
9114707	Complete Kit	-	-	-	-	-
8928263	Heavy Duty Webbing Snap Hook	26(1")	50(2")	-	-	-
9114706	Swivel Buckle	28(1-1/8")	44(1-3/4")	44.5(1-3/4")	-	-
9314631	Swivel Locking Eye	44(1-3/4")	22(7/8")	10(3/8")	12(1/2")	14(9/16")

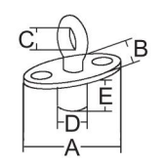

HOLD DOWN STRAP KIT

Stainless Steel 316 & Nylon Webbing

- 9003227: Comes with a webbing 25mm (1") x 96cm (37-13/16").
- Screw size #6.

9003227

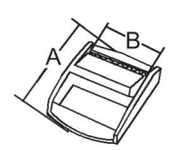

8831487

9024403

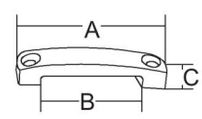

Bulk No.	Model	A mm	B mm	C mm
9003227	Fits Battery Box	-	-	-
8831487	Buckle only for 25mm(1") webbing	44(1-3/4")	26(1-1/4")	-
9024403	Strap holder for 25mm(1") webbing	49(1-15/16")	29(1-1/8")	15(5/8")

TOP CAP

Stainless Steel 316

- Set screw locks tubing into place.
- Bolt size for 8731464 is 5/16"-18.

Single Set Screw

Double Set Screw

Heavy Duty

Double Prong

Bulk No.	Model	A mm	B mm	C mm	D mm
8631423	Single Set Screw	19.3(3/4")	7(1/4")	23(15/16")	6.5(1/4")
3130101	Single Set Screw	22.4(7/8")	7(1/4")	22(7/8")	6.5(1/4")
3140103	Single Set Screw	25.6(1")	7(1/4")	22(7/8")	6.5(1/4")
3288514	Single Set Screw	32(1-1/4")	7(1/4")	25(1")	8.5(5/16")
8828206	Double Set Screw	22.4(7/8")	7(1/4")	19(3/4")	6.5(1/4")
8828207	Double Set Screw	25.6(1")	7(1/4")	17(11/16")	6.5(1/4")
8828208	Double Set Screw	32(1-1/4")	7(1/4")	21(7/8")	8.2(5/16")
8514159	Heavy Duty	25.6(1")	10(3/8")	25(1")	8.2(5/16")
8731464	Double Prong	26(1")	11(7/16")	25(1")	-

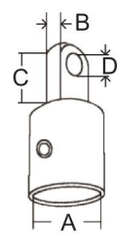

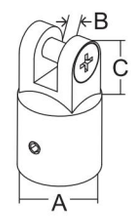

JAW SLIDE BALL STYLE TOP CAP

Stainless Steel 316

- Operates 30° side travel and 190° forward and afterward movement.
- Ball is mounted in a nylon bushing for silent operation.

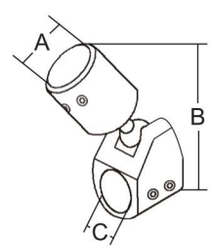

Bulk No.	A mm	B mm	C mm
9114709	23(7/8")	97(3-13/16")	22.4(7/8")
9114710	26(1")	97(3-13/16")	25.6(1")

DECK HINGE BALL STYLE TOP CAP

Stainless Steel 316

- Operates 30° side travel and 190° forward and afterward movement.
- Pull tethered pin, so deck hinge can slide in or out from low profile deck mount.
- Ball is mounted in a nylon bushing for silent operation.
- Screw size #8.

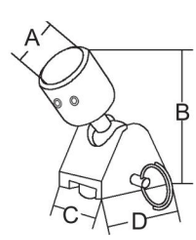

Bulk No.	A mm	B mm	C mm	D mm
9114666	23(7/8")	82(3-1/4")	30(1-3/16")	42(1-5/8")
9114667	26(1")	82(3-1/4")	30(1-3/16")	42(1-5/8")

JAW SLIDE

Stainless Steel 316

Single Prong

Side Mount

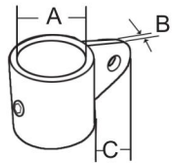

Single Set Screw

Double Set Screw

Heavy Duty

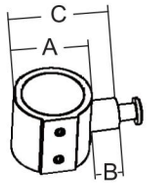

Bulk No.	Model	A mm	B mm	C mm	Bolt/ Pin Size
8828212	Single Prong	22.4(7/8")	5(3/16")	22(7/8")	6.5mm(1/4")
8828213	Single Prong	25.6(1")	5(3/16")	25(1")	6.5mm(1/4")
9114691	Side Mount	22.4(7/8")	10(3/8")	38(1-1/2")	1/4" - 20
9034303	Side Mount	25.6(1")	10(3/8")	42.5(1-11/16")	1/4" - 20
8514106	Single Set Screw	19.2(3/4")	7.5(5/16")	21(13/16")	1/4" - 20
3160100	Single Set Screw	22.4(7/8")	7.5(5/16")	24(15/16")	1/4" - 20
3170102	Single Set Screw	25.6(1")	7.5(5/16")	25(1")	1/4" - 20
3298514	Single Set Screw	32(1-1/4")	7.5(5/16")	28(1-1/8")	1/4" - 20
8828209	Double Set Screw	22.4(7/8")	7.5(5/16")	24(1")	1/4" - 20
8828210	Double Set Screw	25.6(1")	7.5(5/16")	24(1")	1/4" - 20
8828211	Double Set Screw	32(1-1/4")	7.5(5/16")	32(1-1/4")	5/16" - 18
8514158	Heavy Duty	25.6(1")	11(7/16")	25(1")	5/16" - 18

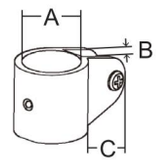

HINGE JAW SLIDE

Stainless Steel 316

Pin Type

Screw Type

Bulk No.	Model	A mm	B mm	C mm
8731442	Screw 1/4"-20	22.2(7/8")	28(1-1/8")	66(2-5/8")
8731443	Screw 1/4"-20	25.4(1")	28(1-1/8")	66(2-5/8")
8731487	Screw 1/4"-20	32(1-1/4")	28(1-1/8")	73(2-7/8")
9114651	Pin #5460030	22.2(7/8")	28(1-1/8")	66(2-5/8")
9114652	Pin #5460030	25.4(1")	28(1-1/8")	66(2-5/8")
9114653	Pin #5460030	32(1-1/4")	28(1-1/8")	73(2-7/8")

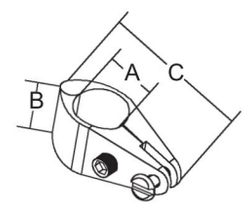

UNIVERSAL DECK HINGE

Stainless Steel 316

- Can be mounted horizontally or vertically.
- Bottom friction anti-rattle bushing is included.
- Screw size #14.

9114686

8631430

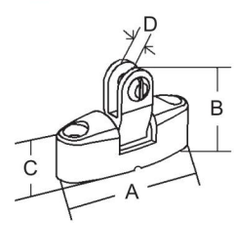

Bulk No.	Model	A mm	B mm	C mm	D mm
8631430	W/ Screw	69(2-3/4")	46(1-13/16")	25(1")	7.6(1/4")
9114686	W/ Pin	69(2-3/4")	46(1-13/16")	25(1")	7.6(1/4")

DECK HINGE

Stainless Steel 316

- Angle Base: 3220222 and 9114682
- Concave Base: 3210200 and 9114684
- Screw size #10.

3200104

9114680

3220222

9114682

3210200

9114684

Bulk No.	Model	A mm	B mm	C mm	D mm
3200104	W/ Screw 1/4"-20	62(2-7/16")	19(3/4")	36(1-7/16")	7.6(5/16")
9114680	W/ Pin #5460030	62(2-7/16")	19(3/4")	36(1-7/16")	7.6(5/16")
3220222	W/ Screw 1/4"-20	57(2-1/4")	19(3/4")	36(1-7/16")	7.6(5/16")
9114682	W/ Pin #5460030	57(2-1/4")	19(3/4")	36(1-7/16")	7.6(5/16")
3210200	W/ Screw 1/4"-20	61(2-3/8")	22(7/8")	37(1-7/16")	7.6(5/16")
9114684	W/ Pin #5460030	61(2-3/8")	22(7/8")	37(1-7/16")	7.6(5/16")

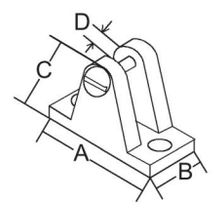

DECK HINGE

Stainless Steel 316

3270213

8514108

3230109

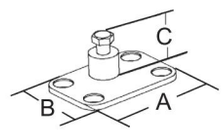

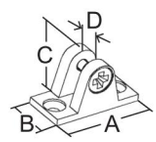

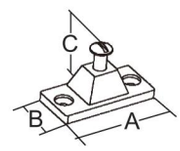

Bulk No.	Model	A mm	B mm	C mm	D mm	Bolt Size	Screw Size
3270213	Heavy Duty	72(2-7/8")	47(1-7/8")	29(1-1/8")	-	5/16"-18	#14
8514108	Heavy Duty	54(2-1/8")	25(1")	25(1")	10(3/8")	5/16"-18	#14
3230109	Side Mount	51(2")	23(15/16")	30(1-3/16")	-	1/4"-20	#10

REMOVABLE DECK HINGE

Stainless Steel 316

- Easy push release button to remove bimini top assembly.
- Low profile mounting base.
- Screw size 1/4".

Disassembly

Top Cap is not included.

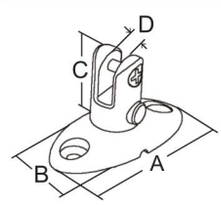

Bulk No.	A mm	B mm	C mm	D mm
9514130	75(3")	35(1-3/8")	43(1-3/4")	8(5/16")

TUBING HINGE

Stainless Steel 316

- 1" model fits 1" tubing or can be end welded to 1-1/4" tubing.
- 7/8" model fits 7/8" tubing or can be end welded to 1-1/8" tubing.

W/O Pin

W/ Pin

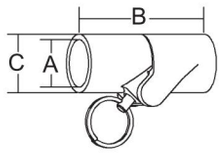

Bulk No.	Model	A mm	B mm	C mm
9027201	W/O Pin	25.6(1")	77(3")	32(1-1/4")
9027202	W/ Pin #5460030	25.6(1")	77(3")	32(1-1/4")
9027203	W/O Pin	22.4(7/8")	78(3-1/16")	29(1-1/8")
9027204	W/ Pin #5460030	22.4(7/8")	78(3-1/16")	29(1-1/8")

QUICK RELEASE PIN

Stainless Steel 316 Pin

Stainless Steel 304 Ring & Ball

- Single spring ball design.

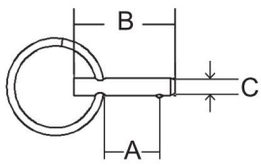

Bulk No.	A mm	B mm	C mm
5460040	13(1/2")	27(1-1/16")	4.75(3/16")
5460030	22(7/8")	35(1-3/8")	6.35(1/4")
8828218	33(1-5/16")	46(1-13/16")	6.35(1/4")
8828225	57(2-1/4")	70(2-3/4")	6.35(1/4")
9034101	38(1-1/2")	53(2")	8(5/16")

REMOVABLE PIN

Stainless Steel 316

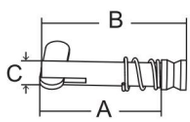

Bulk No.	A mm	B mm	C mm
8425334	32.3(1-1/4")	39(1-1/2")	6.35(1/4")

TOP INSERT

Stainless Steel 316

- Designed to fit internally into most popular tube size.

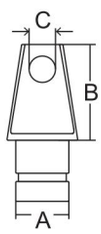

Bulk No.	Fits Tube	A mm	B mm	C mm
8514107	3/4"	16.1(5/8")	30(1-3/16")	8(5/16")
8631420	7/8"	18.8(3/4")	30(1-3/16")	8(5/16")
8631421	1"	21.5(7/8")	30(1-3/16")	8(5/16")

POP-OUT SKI TOW CLEAT

Stainless Steel 316

- Easy single hole installation.
- Can be used as ski tow ring and fender cleat.
- When open, the pylon has an opening to hold ski tow rope and can be rotated 360°.
- Backing washer and nut are included.
- Product is designed to be installed vertically to the mounting surface.
- The pulling force should be horizontal to ensure safety.

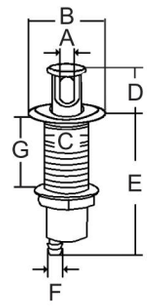

Bulk No.	A mm	B mm	C mm	D mm	E mm	F mm	G mm
9512930	15(5/8")	68(2-11/16")	47.5(1-7/8")	36.5(1-7/16")	145(5-3/4")	16(5/8")	76(3")

MAG. SKI TOW POST

Stainless Steel 316 Socket

- Removable stainless steel 304 ski tow post is held in the flush socket by two powerful waterproof magnets.
- Simply pull the post out to remove.
- 360° rotational head has nylon bushings for smooth slalom pulling.
- 9512936-A is sold separately.

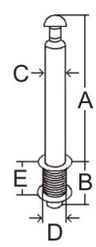

Bulk No.	A mm	B mm	C mm	D mm	E mm
9512936	305(12")	105(4-1/8")	38(1-1/2")	44(1-3/4")	73(2-7/8")
9512936-A	5/8" Drain Adapter				

SKI TOW POST

NEW

Stainless Steel 316

- Removable ski tow post is held in the stainless steel socket by 9.5mm (3/8") quick release pin.
- Two pin holes on socket are available for height adjustment of ski tow post.
- 12.7mm (1/2") bolt stops the post from dropping.
- 1/2"-13T threaded hole at the bottom of socket for extra bracket if required.
- 4mm (5/32") drainage hole is at the bottom.
- Quick release pin and bolt are included.
- Ski tow post load limit: 800lb. Do not use for tubing.
- Screw size 1/4".

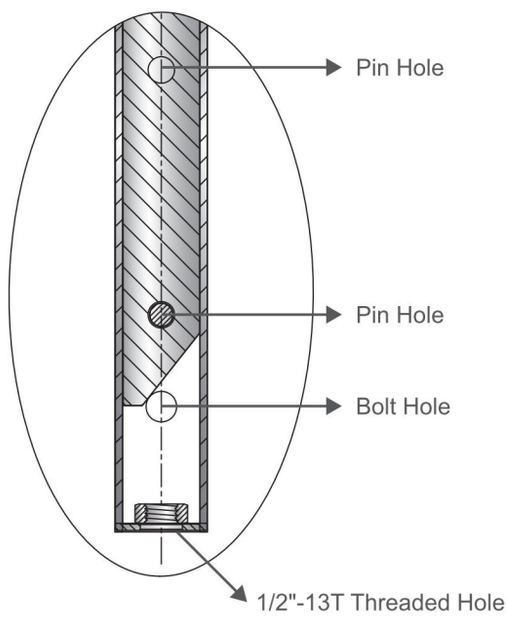

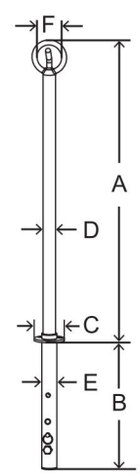

Bulk No.	A mm	B mm	C mm	D mm	E mm	F mm
0417068	768.9(30-1/4")	329.4(13")	76.2(3")	31.8(1-1/4")	38.1(1-1/2")	62.3(2-1/2")

MARINE BLOCK

NEW

Stainless Steel 316 & POM Sheave

- Lightweight.
- High-impact Delrin® sheave.
- Deluxe S.S.316 housing and finish.
- Swivelling bale head.
- Do not use for human suspension.

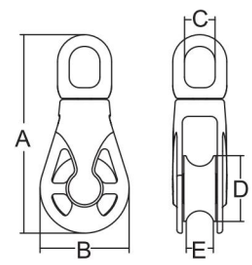

Bulk No.	A mm	B mm	C mm	D mm	E mm	SWL
0518112	93.5(3-11/16")	42(1-5/8")	14.5(9/16")	31(1-1/4")	13(1/2")	500kgs

PULLEY

Stainless Steel 304 Shackle & Nylon Sheave

- For light applications such as dinghy or spinnaker controls.

0132200

0132300

0132400

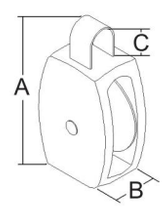

Bulk No.	Sheave Dia. mm	Rope Dia. mm	A mm	B mm	C mm
0132200	25(1")	8(5/16")	56(2-3/16")	15(9/16")	15(9/16")
0132300	35(1-3/8")	10(3/8")	84(3-5/6")	21(7/8")	20(3/4")
0132400	50(2")	14(9/16")	95(3-3/4")	28(1-1/8")	22(7/8")

FRICTION HINGE

Stainless Steel 316

NEW

Video

- Revolutionary technology designed into hinge barrel construction creates constant torque.
- Designed to hold door open without any torque adjustment.
- Ideal for light doors like overhead door, bait well lid, glove box, interior door, anchor locker, electronic panel, etc.
- Passed 10,000 times cycle test and lost less than 10% on torque; 20,000 times lost 20% or less only.
- Passed 500 hours salt-spray test.

Patented

Hold door open at any angle.

FRICTION HINGE - CENTER BARREL

0219321
38mm X 40mm
1-1/2" X 1-9/16"
Screw Size : #8 or M4.

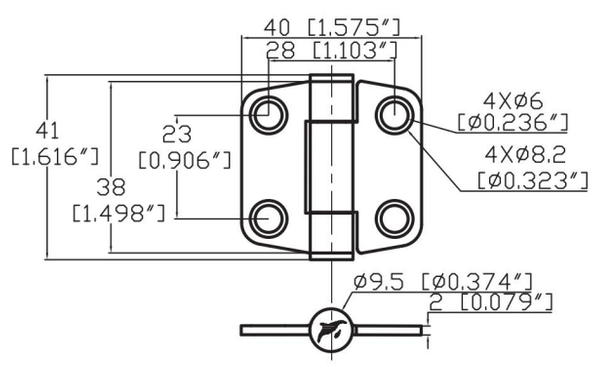

NEW

Video

FRICTION HINGE
- BARREL UP

0319221
37mm X 38mm
1-1/2" X 1-1/2"
Screw Size : #8 or M4.

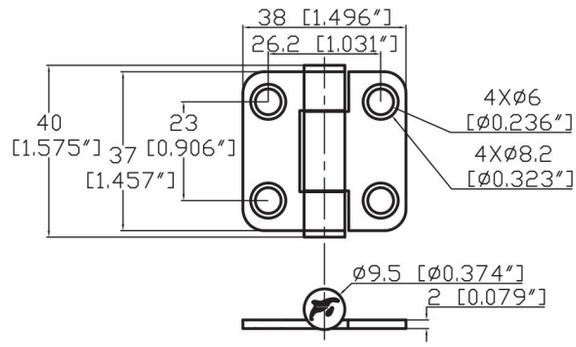

FRICTION HINGE
- BARREL UP

0319227
37.2mm X 57mm
1-1/2" X 2-1/4"
Screw Size : #8 or M4.

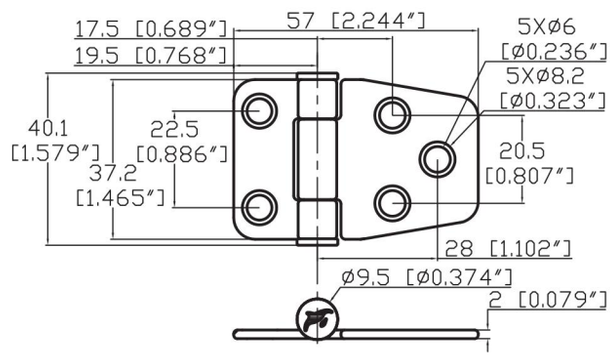

FRICTION HINGE
- BARREL UP

0319223
40mm X 76.2mm
1-9/16" X 3"
Screw Size : #8 or M4.

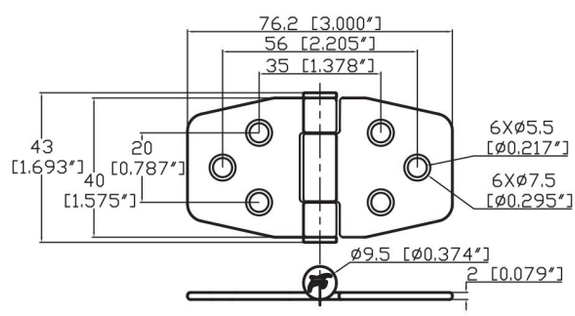

COVERED FRICTION HINGE

NEW

Stainless Steel 316

- Barrel down type.
- Revolutionary technology designed into hinge barrel construction creates constant torque.
- Designed to hold door open without any torque adjustment.
- Ideal for light doors like overhead door, bait well lid, glove box, interior door, anchor locker, electronic panel, etc.
- Silicon caulking on cover is required.
- Passed 10,000 times cycle test and lost less than 10% on torque; 20,000 times lost 20% or less only.
- Passed 500 hours salt-spray test.

Patented

Hold door open at any angle.

0519523
39.6mm X 78mm
1-9/16" X 3-1/16"
Screw Size : #8 or M4.

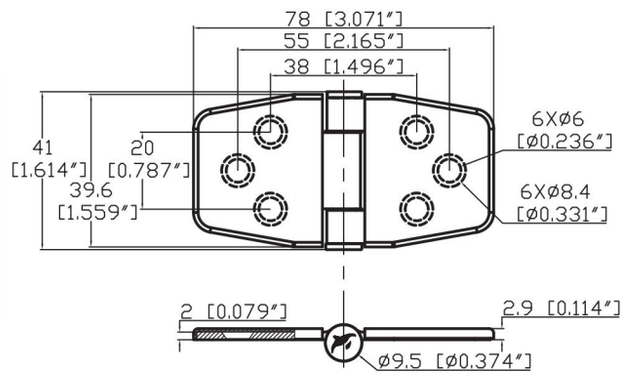

NYLON COVERED HINGE

Nylon

Video

- Barrel up type.
- Unique covers conceal fasteners.
- Covers can be removed and reused.

Patented

0119272
41mm X 82.4mm
1-5/8" X 3-1/4"
Screw Size : #8 or M4.

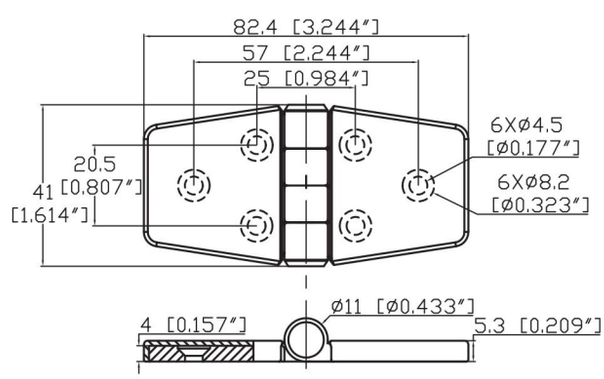

SEAM FRICTION HINGE

NEW

Stainless Steel 316

- Revolutionary technology designed into hinge barrel construction creates constant torque.
- Designed to hold door open without any torque adjustment.
- Ideal for different sizes of doors like overhead door, bait well lid, glove box, access door, interior door, anchor locker, electronic panel, hatch etc.
- Passed 10,000 times cycle test and lost less than 20% on torque; 20,000 times lost 25% or less only.
- Passed 500 hours salt-spray test.
- #6 R/H fasteners are required.

Patented

0419621
Short Leaves

0419626
Long Leaves

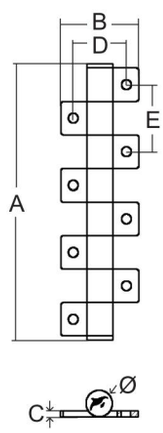

Bulk No.	Leaf	A mm	B mm	C mm	D mm	E mm	Ø mm
0419619	S	51(2")	28.2(1-1/8")	2(1/16")	19.2(3/4")	24(1-15/16")	9.5(3/8")
0419620	S	75(3")	28.2(1-1/8")	2(1/16")	19.2(3/4")	24(1-15/16")	9.5(3/8")
0419621	S	99(3-7/8")	28.2(1-1/8")	2(1/16")	19.2(3/4")	24(1-15/16")	9.5(3/8")
0419622	S	123(4-7/8")	28.2(1-1/8")	2(1/16")	19.2(3/4")	24(1-15/16")	9.5(3/8")
0419623	L	53.8(2-1/8")	45(1-3/4")	2(1/16")	35(1-3/8")	25.4(1")	9.5(3/8")
0419625	L	79.2(3-1/8")	45(1-3/4")	2(1/16")	35(1-3/8")	25.4(1")	9.5(3/8")
0419626	L	104.6(4-1/8")	45(1-3/4")	2(1/16")	35(1-3/8")	25.4(1")	9.5(3/8")
0419629	L	130(5-1/8")	45(1-3/4")	2(1/16")	35(1-3/8")	25.4(1")	9.5(3/8")

SEAM FRICTION COVERED HINGE

NEW

Stainless Steel 316

- Revolutionary technology designed into hinge barrel construction creates constant torque.
- Designed to hold door open without any torque adjustment.
- Ideal for different sizes of doors like overhead door, bait well lid, glove box, access door, interior door, anchor locker, electronic panel, hatch etc.
- Silicon caulking on cover is required.
- Passed 10,000 times cycle test and lost less than 20% on torque; 20,000 times lost 25% or less only.
- Passed 500 hours salt-spray test.
- #6 R/H fasteners are required.

Patented

0419627

0419628

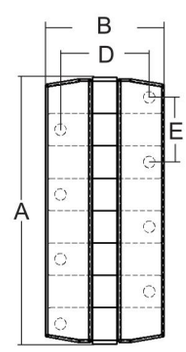

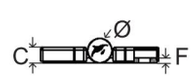

Bulk No.	A mm	B mm	C mm	D mm	E mm	F mm	Ø mm
0419627	79.2(3-1/8")	46.8(1-7/8")	6(1/4")	35(1-3/8")	25.4(1")	2(1/16")	9.5(3/8")
0419628	104.6(4-1/8")	46.8(1-7/8")	6(1/4")	35(1-3/8")	25.4(1")	2(1/16")	9.5(3/8")

BUTTERFLY HINGE

Stainless Steel 316

NEW

Video

- Modern shape and simplified two seam barrel design.
- The unique patented covers are built into the pivot for permanent use and concealing the screws.
- Push cover to snap in place. Can be unsnapped by using a small flat-head screwdriver.
- Fits different countersink screw types.
- Silicon caulking on cover is required for specific application use.
- Passes 500 hours salt-spray test.
- If this hinge is mounted in the pocket, make sure to have enough room around the hinge leaves to allow the covers to be snapped down.

Patented

Instruction

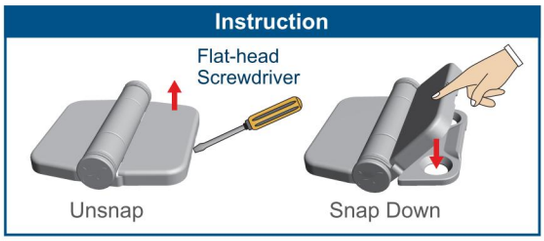

BUTTERFLY HINGE - BARREL UP

0219311
39.6mm X 41.8mm
1-9/16" X 1-5/8"
Screw Size : #8 or M4.

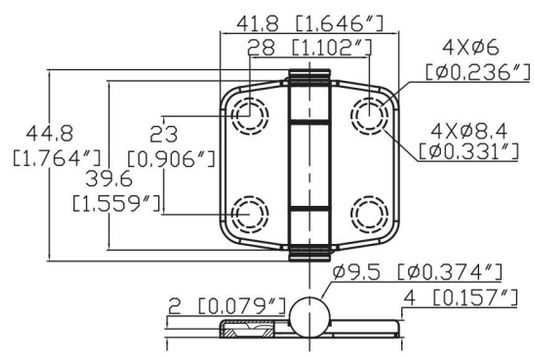

NEW

BUTTERFLY HINGE - BARREL UP

0319313
39.6mm X 78mm
1-9/16" X 3-1/16"
Screw Size : #8 or M4.

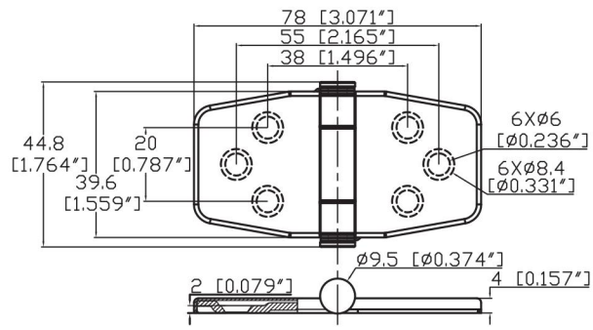

BUTTERFLY HINGE - CENTER BARREL

0319413
39.6mm X 78mm
1-9/16" X 3-1/16"
Screw Size : #8 or M4.

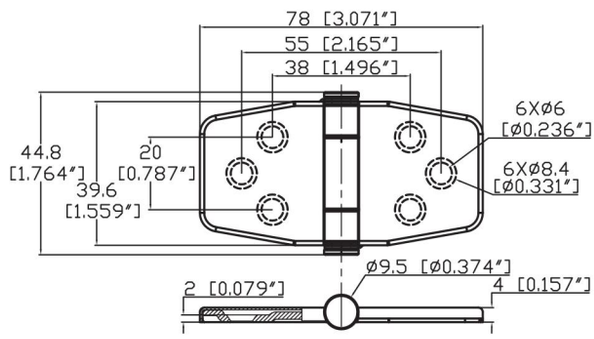

BUTTERFLY HINGE - BARREL UP

0319317
39.6mm X 59.9mm
1-9/16" X 2-3/8"
Screw Size : #8 or M4.

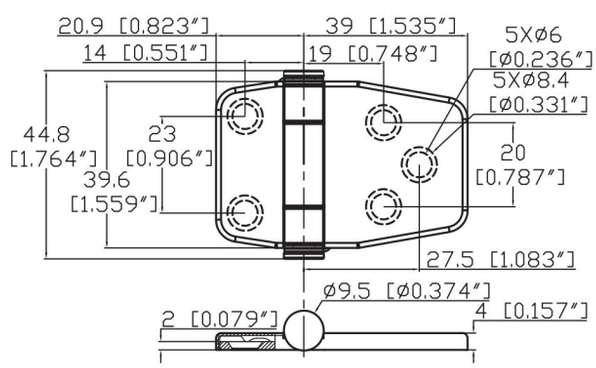

NEW

Video

BUTTERFLY HINGE - BARREL UP

0319319
66.2mm X 66.6mm
2-5/8" X 2-5/8"
Screw Size : #10 or M5.

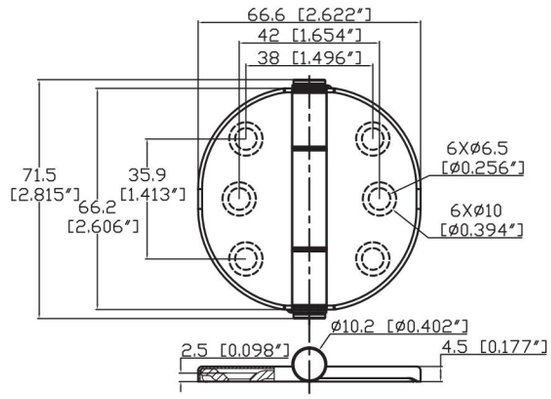

BUTTERFLY HINGE - BARREL UP

0319315
78mm X 78mm
3-1/16" X 3-1/16"
Screw Size : #10 or M5.

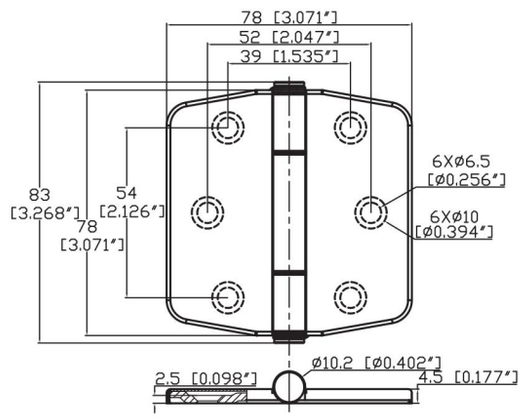

BUTTERFLY HINGE - CENTER BARREL

0319415
78mm X 78mm
3-1/16" X 3-1/16"
Screw Size : #10 or M5.

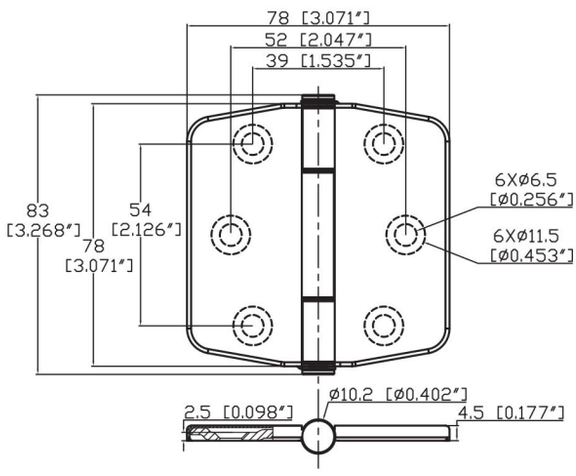

COVERED HINGE

Stainless Steel 316

- Unique stainless steel hinge covers conceal fasteners.
- Easy installation with 3M VHB double-sided tape installed to the back side of the polished hinge covers.
- The cover can be removed by using a heat gun or hair dryer.
- Passes 500 hours salt-spray test.
- Innovation and beauty combined.
- Not available in USA market.

Patented

COVERED UTILITY HINGE - BARREL UP

9120655
38.6mm X 78.4mm
1-1/2" X 3-1/16"
Screw Size : #8 or M4.

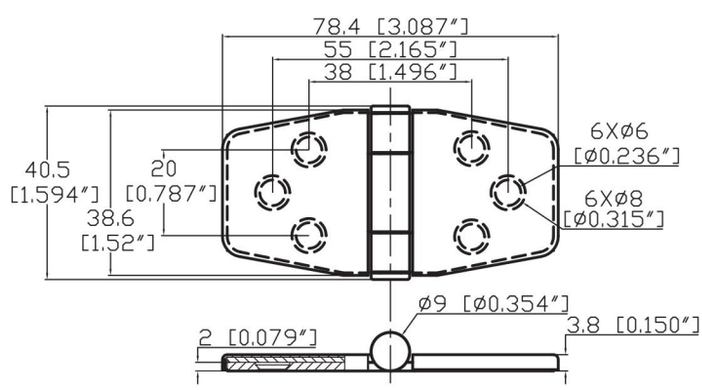

COVERED UTILITY HINGE - CENTER BARREL

9120656
38.2mm X 81.2mm
1-1/2" X 3-3/16"
Screw Size : #8 or M4.

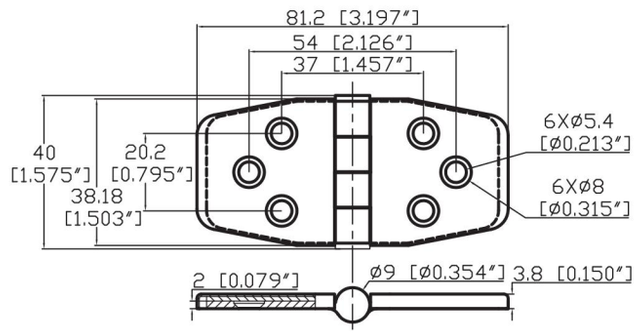

COVERED CABINET HINGE - BARREL UP

9120652
38.2mm X 59.3mm
1-1/2" X 2-5/16"
Screw Size : #8 or M4.

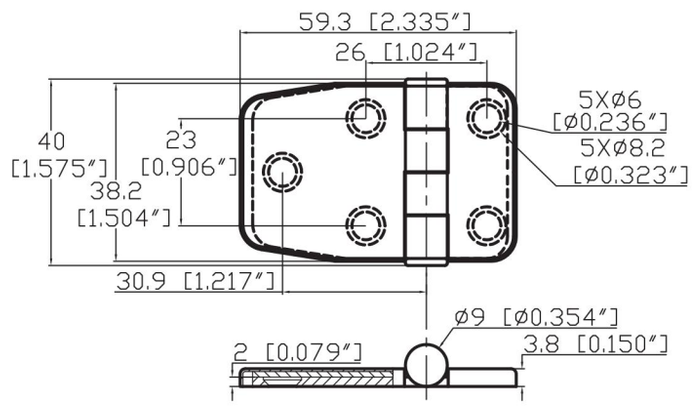

COVERED BUTT HINGE - BARREL UP

9120651
38.2mm X 39.2mm
1-1/2" X 1-1/2"
Screw Size : #8 or M4.

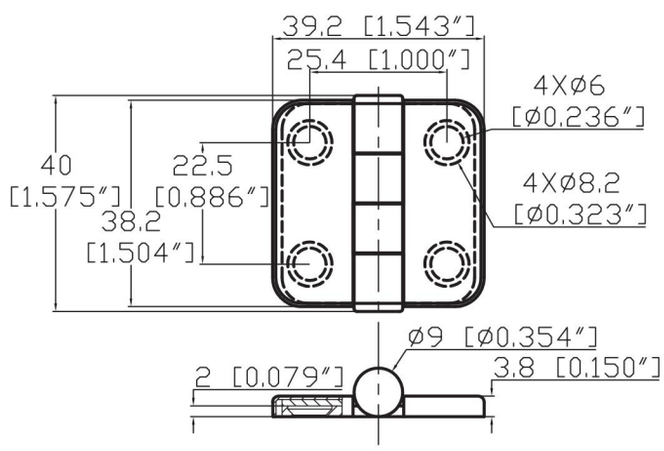

COVERED CABINET HINGE - BARREL UP

9120653
76.2mm X 76.6mm
3" X 3"
Screw Size : #10 or M5.

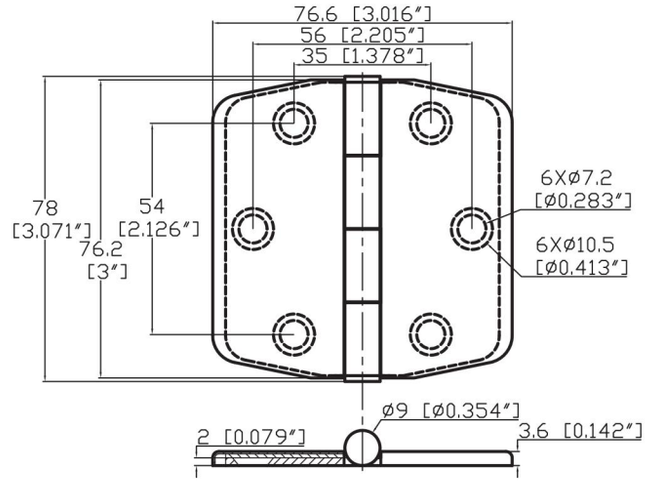

COVERED BUTT HINGE - CENTER BARREL

9120658
76.2mm X 76.6mm
3" X 3"
Screw Size : #10 or M5.

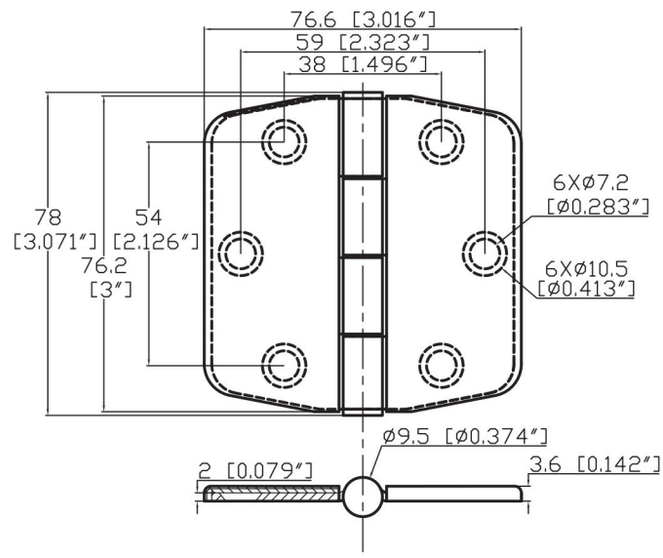

COVERED CABINET HINGE - BARREL UP

9120654
66.5mm X 66.8mm
2-5/8" X 2-5/8"
Screw Size : #10 or M5.

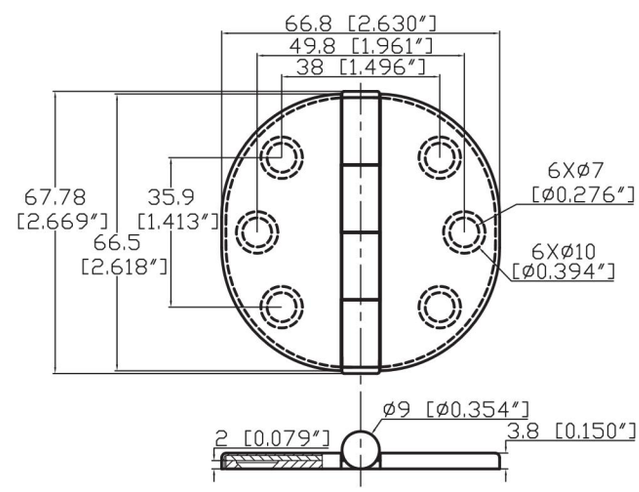

CAST HINGE

Stainless Steel 316

- Thin cast hinge with an extruded roll pin.
- Low profile hinge barrel design is welded closed on both ends.
- Tight tolerance construction.
- Durability and beauty combined.

BUTT HINGE
- BARREL UP

8936621
37.5mm X 37mm
1-1/2" X 1-1/2"
Screw Size : #8 or M4.

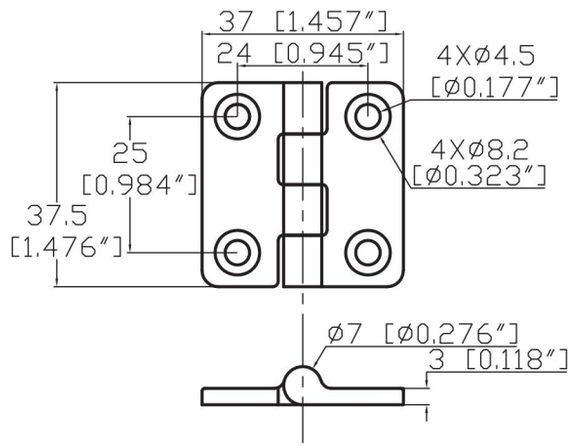

BUTT HINGE
- BARREL UP

8936625
36.2mm X 48mm
1-7/16" X 1-7/8"
Screw Size : #8 or M4.

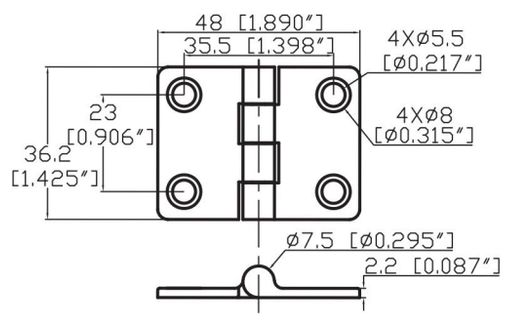

BUTT HINGE
- BARREL UP

8936622
49.5mm X 52.5mm
1-15/16" X 2-1/16"
Screw Size : #8 or M4.

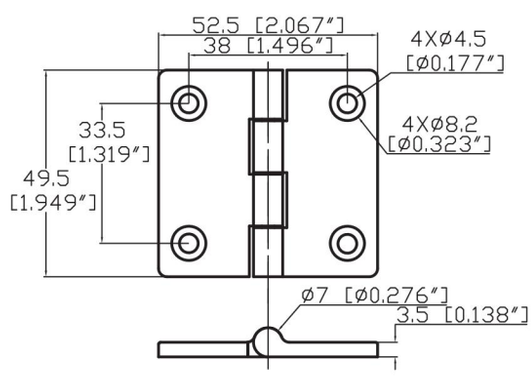

BUTT HINGE
- BARREL UP

8936627
36.6mm X 59.3mm
1-7/16" X 2-5/16"
Screw Size : #8 or M4.

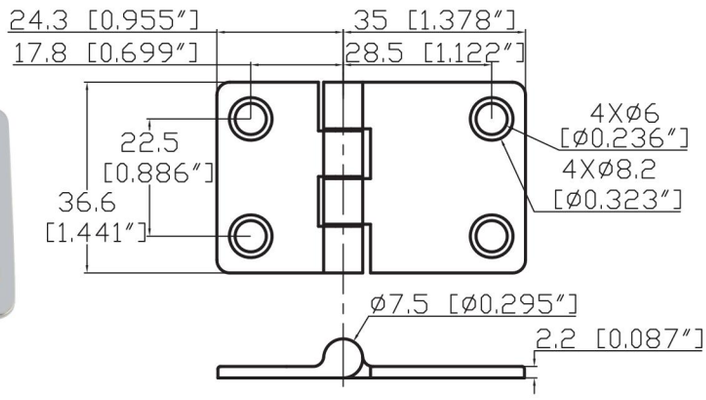

BUTT HINGE
- BARREL UP

8936628
37mm X 70mm
1-1/2" X 2-3/4"
Screw Size : #8 or M4.

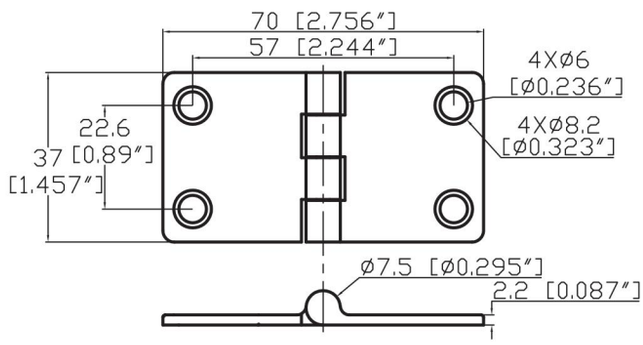

BUTT HINGE
- BARREL UP

9519870
75mm X 70mm
3" X 2-3/4"
Screw Size : #10 or M5.

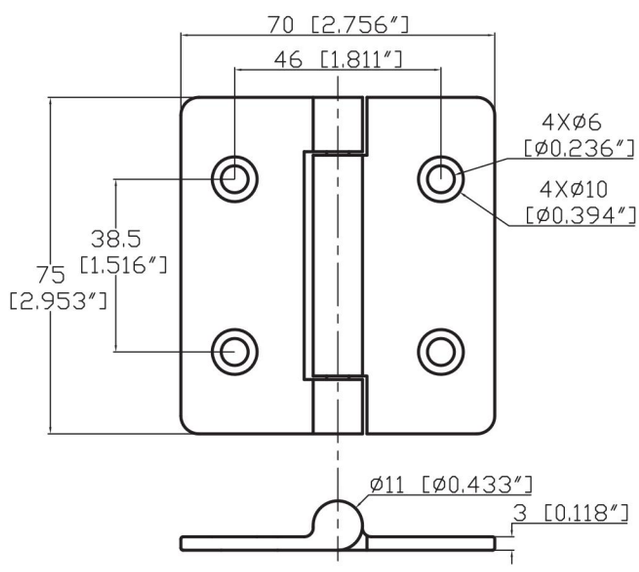

BUTT HINGE
- BARREL UP

9122250
76.5mm X 50.5mm
3" X 2"
Screw Size : #10 or M5.

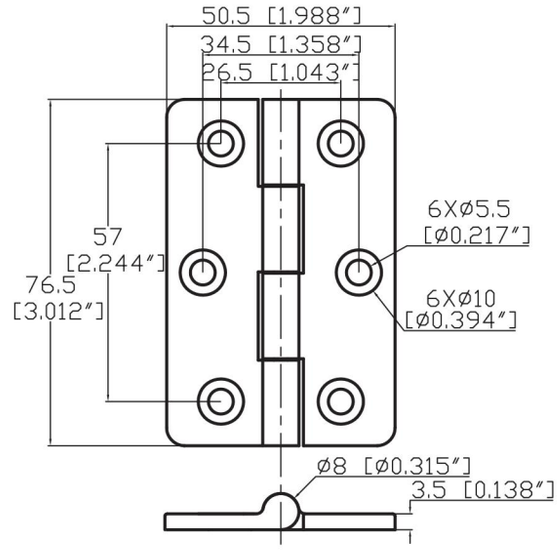

BUTT HINGE
- BARREL UP

9519876
77mm X 51mm
3" X 2"
Screw Size : #10 or M5.

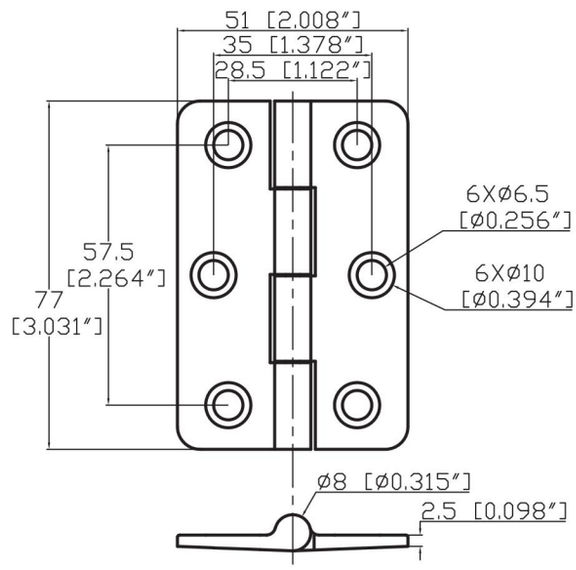

FLAT DOOR HINGE
- BARREL DOWN

9022207
37mm X 75mm
1-1/2" X 3"
Screw Size : #8 or M4.

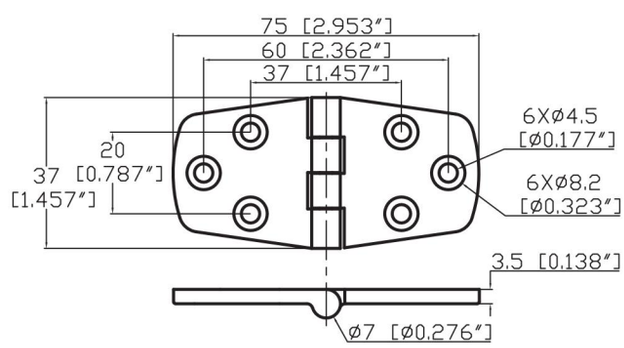

FLUSH HINGE
- BARREL DOWN

9022205
41mm X 53mm
1-5/8" X 2-1/8"
Screw Size : #8 or M4.

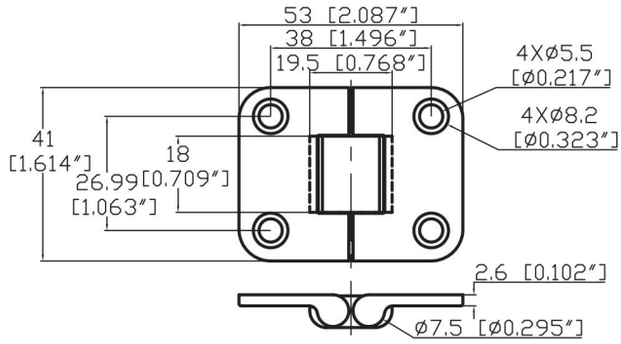

FLUSH HINGE
- BARREL DOWN

8631409
42mm X 70.5mm
1-5/8" X 2-3/4"
Screw Size : #8 or M4.

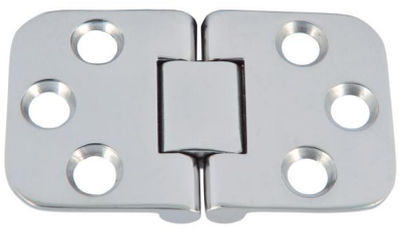

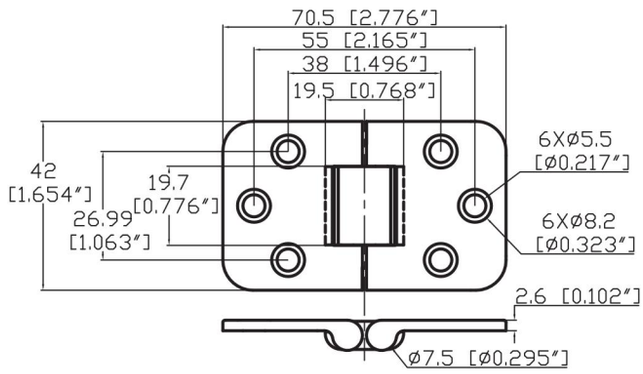

UTILITY HINGE
- BARREL UP

8936635
37.5mm X 76.5mm
1-1/2" X 3"
Screw Size : #8 or M4.

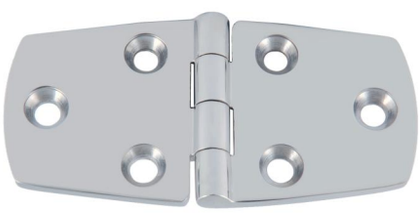

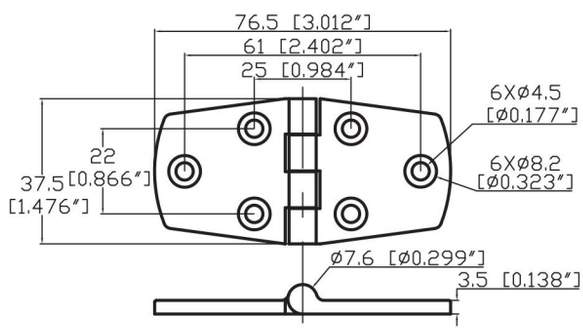

UTILITY HINGE
- BARREL UP

8936636
38mm X 104mm
1-1/2" X 4-1/8"
Screw Size : #8 or M4 .

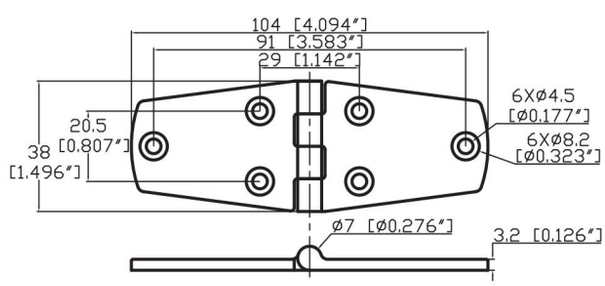

CABINET HINGE - BARREL UP

8936631
38mm X 60mm
1-1/2" X 2-3/8"
Screw Size : #8 or M4.

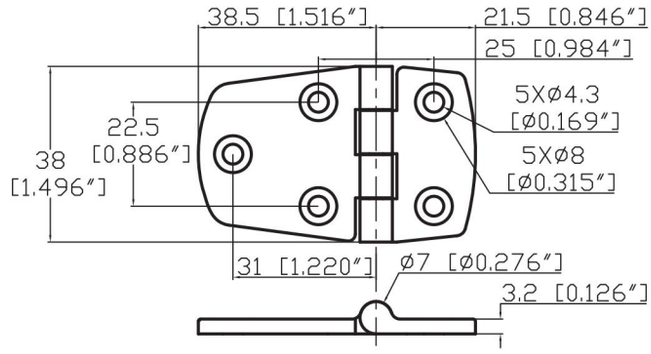

CABINET HINGE - BARREL UP

8936632
38mm X 74mm
1-1/2" X 2-15/16"
Screw Size : #8 or M4.

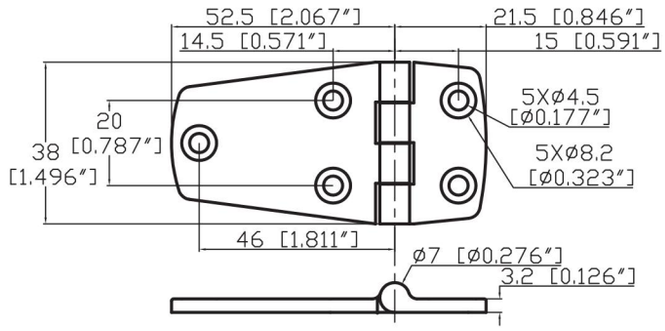

CABINET HINGE - BARREL UP

8936632-2
38mm X 74mm
1-1/2" X 2-15/16"
Screw Size : #10 or M5.

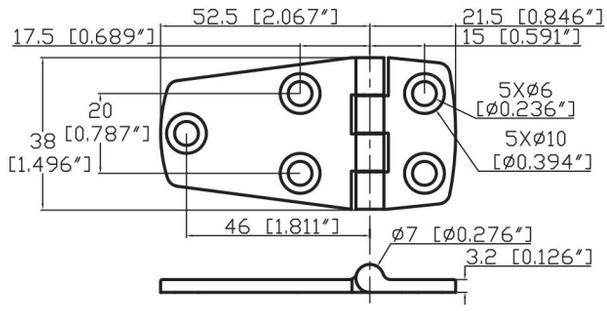

DOOR HINGE - BARREL UP

0219290
38mm X 105mm
1-1/2" X 4-1/8"
Screw Size : #10 or M5.

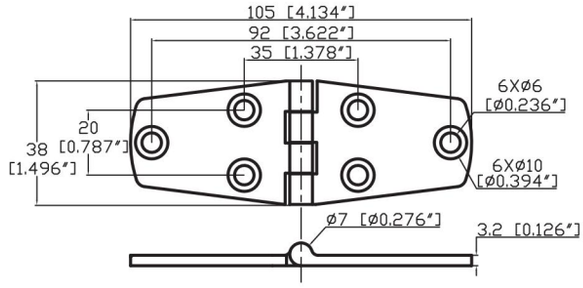

ROUND SIDE HINGE - BARREL UP

9519380
38mm X 60mm
1-1/2" X 2-3/8"
Screw Size : #8 or M4.

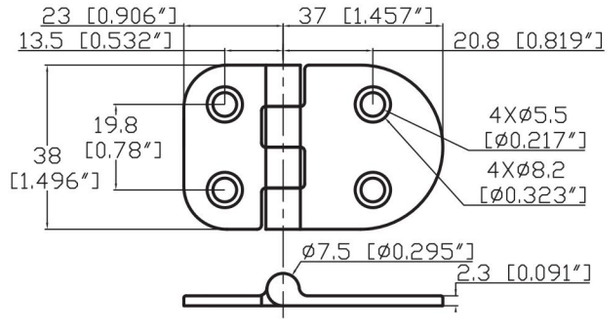

ROUND SIDE HINGE - BARREL DOWN

9324320
38mm X 60mm
1-1/2" X 2-3/8"
Screw Size : #8 or M4.

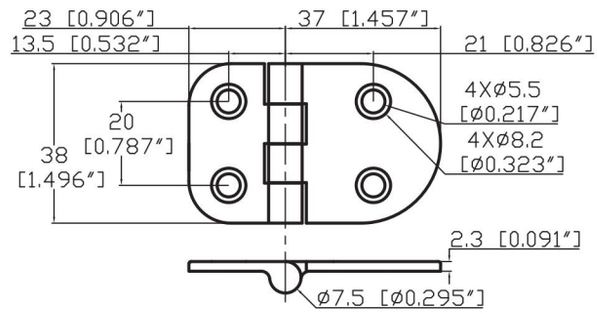

ROUND SIDE HINGE - BARREL UP

8936645
38.6mm X 75mm
1-1/2" X 3"
Screw Size : #8 or M4.

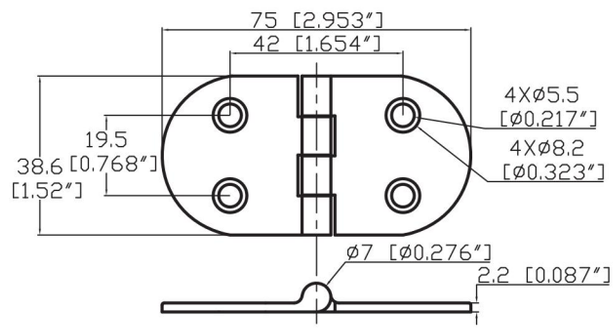

ROUND SIDE HINGE - BARREL DOWN

8936606
38.5mm X 75mm
1-1/2" X 3"
Screw Size : #8 or M4.

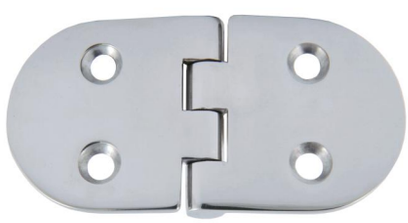

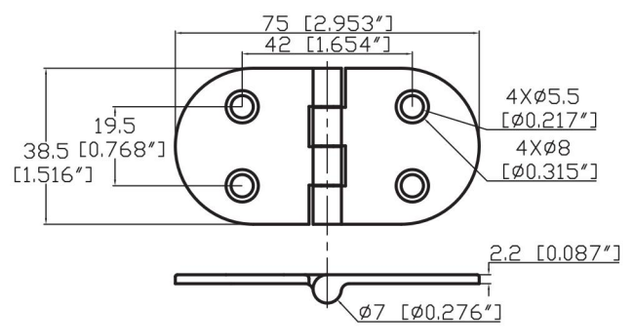

STRAP HINGE - BARREL UP

8936641
26.5mm X 103.8mm
1-1/16" X 4-1/8"
Screw Size : #8 or M4.

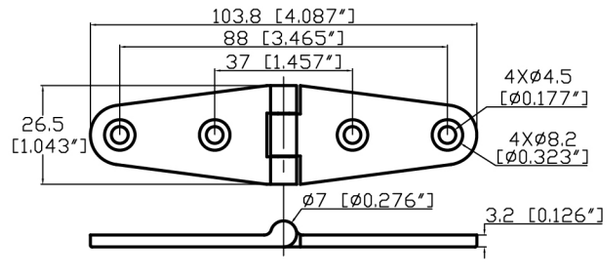

STRAP HINGE - BARREL DOWN

8936603
26.5mm X 100.8mm
1-1/16" X 4"
Screw Size : #8 or M4.

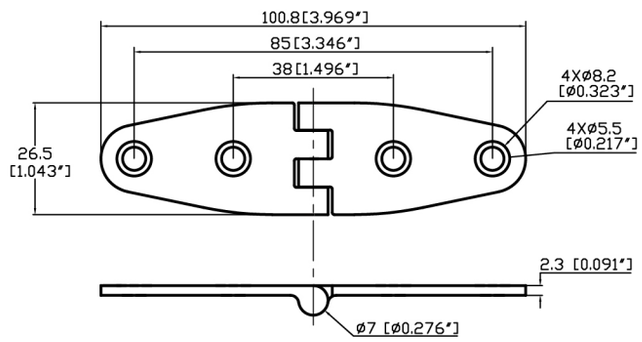

STRAP HINGE - BARREL UP

8936643
25.5mm X 154.5mm
1" X 6-1/16"
Screw Size : #8 or M4.

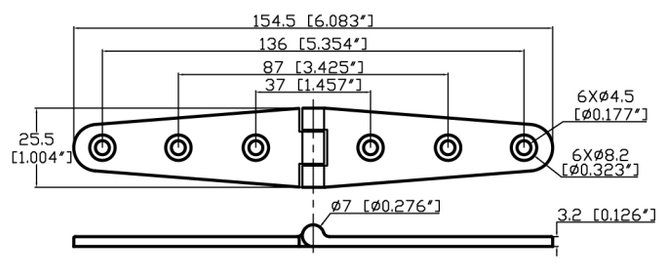

STRAP HINGE - BARREL UP

8936647
38mm X 142mm
1-1/2" X 5-9/16"
Screw Size : #8 or M4.

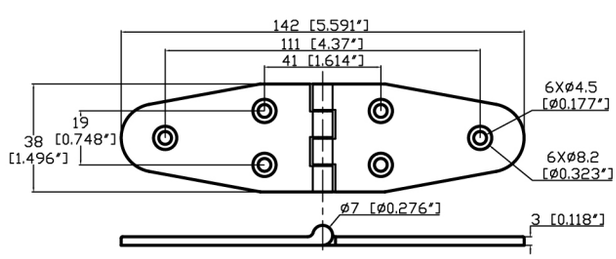

ROUND SIDE HINGE - BARREL UP

8936646
38.5mm X 107.5mm
1-1/2" X 4-1/4"
Screw Size : #8 or M4.

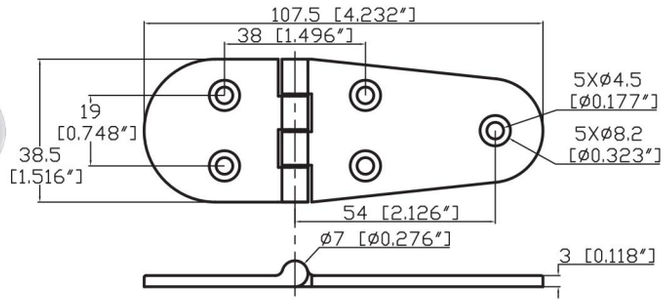

OVAL HINGE - CENTER BARREL

9424531
30mm X 82mm
1-3/16" X 3-1/4"
Screw Size : #10 or M5.

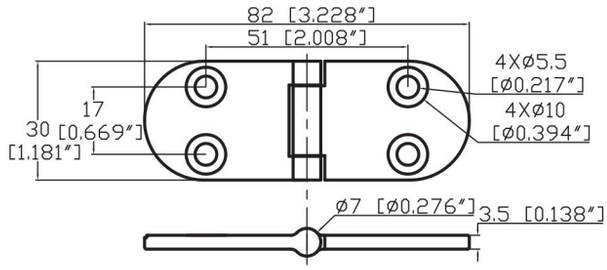

HATCH HINGE - BARREL UP

9424540
50.8mm X 165.1mm
2" X 6-1/2"
Screw Size : 1/4" or M6.

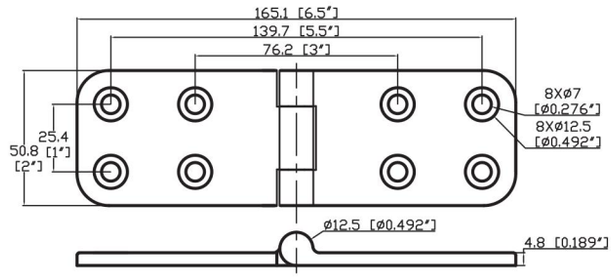

HATCH HINGE - BARREL UP

0319292
76.2mm X 98.4mm
3" X 3-7/8"
Screw Size : #10 or M5.

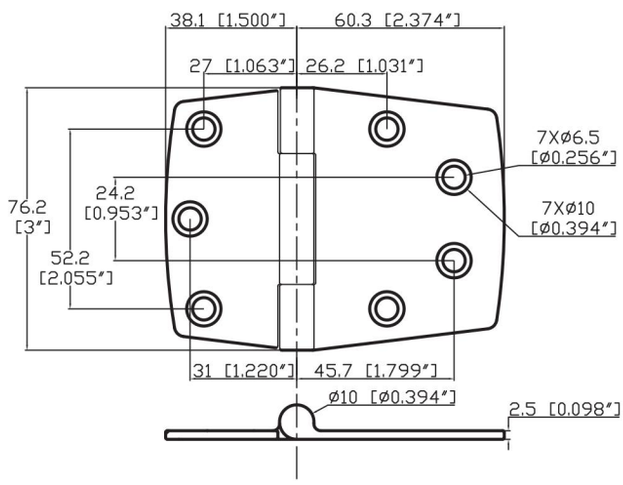

DOOR HINGE
- BARREL UP

9120660
77mm X 76.2mm
3" X 3"
Screw Size : #10 or M5.

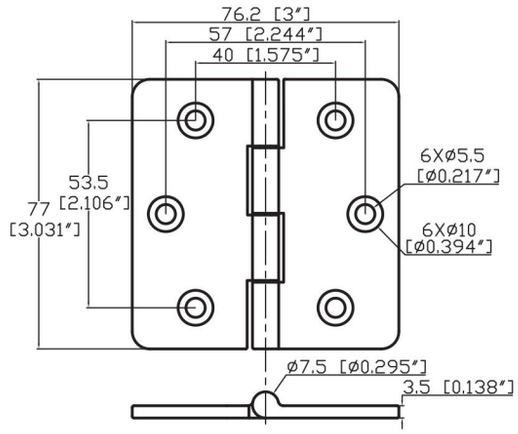

DOOR HINGE
- BARREL UP

8936613
101mm X 82mm
4" X 3-1/4"
Screw Size : 1/4" or M6.

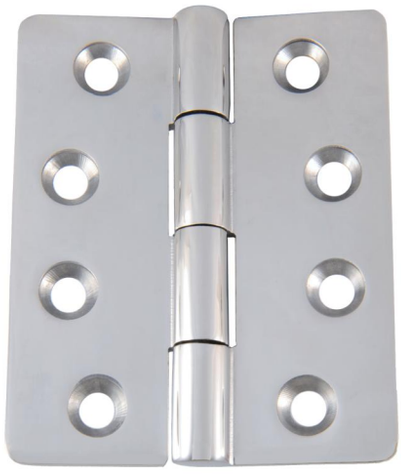

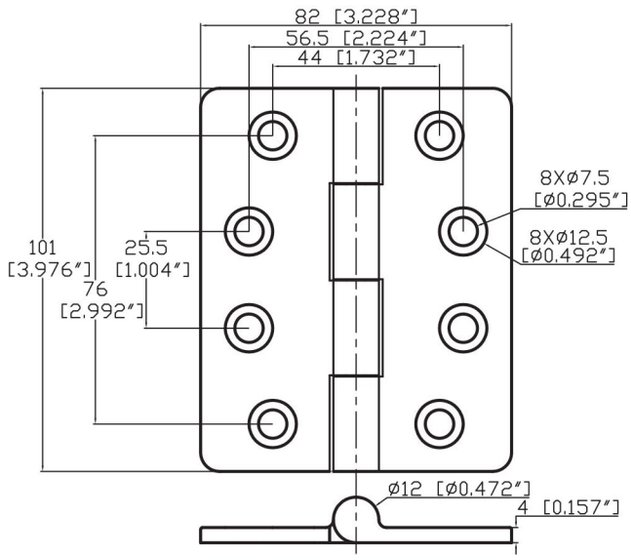

DOOR HINGE
- BARREL UP

9324350
102mm X 102mm
4" X 4"
Screw Size : 1/4" or M6.

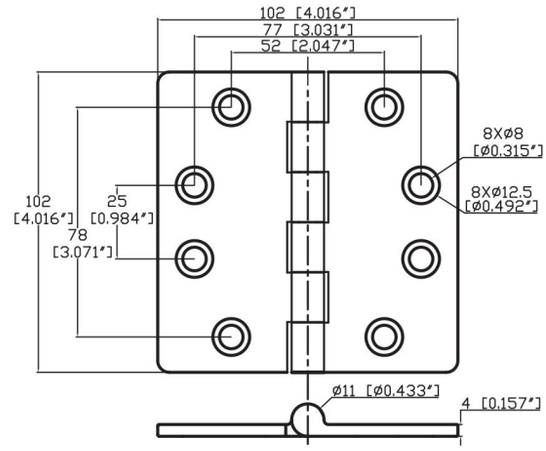

DOOR HINGE
- BARREL DOWN

9324353
102mm X 102mm
4" X 4"
Screw Size : 1/4" or M6.

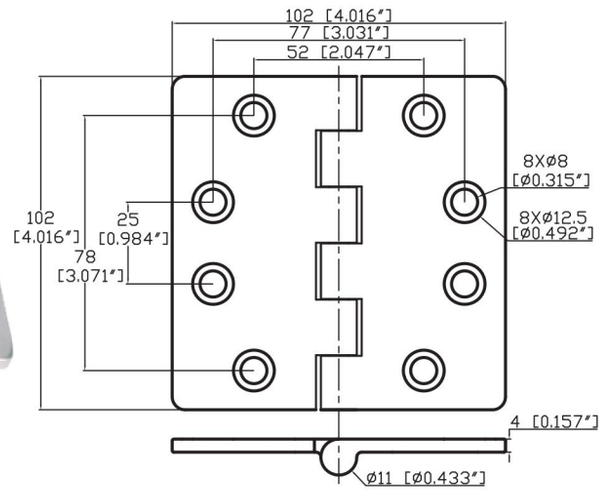

DOOR HINGE
- BARREL DOWN

9022206
127mm X 127mm
5" X 5"
Screw Size : 1/4" or M6.

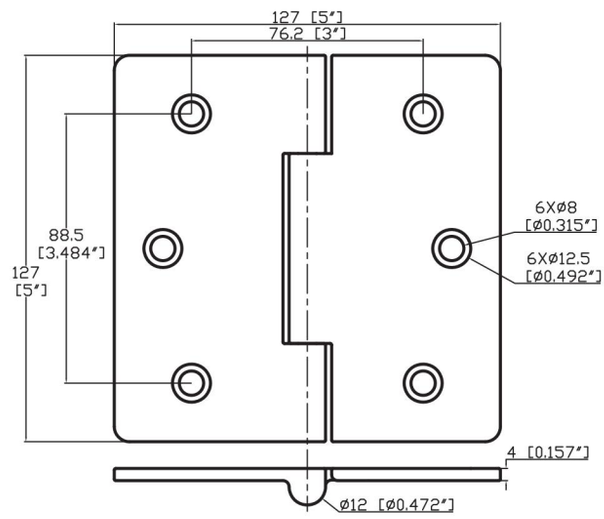

TAKE APART HINGE (LEFT) - BARREL UP

8822209
37mm X 86mm
1-1/2" X 3-3/8"
Screw Size : #10 or M5.

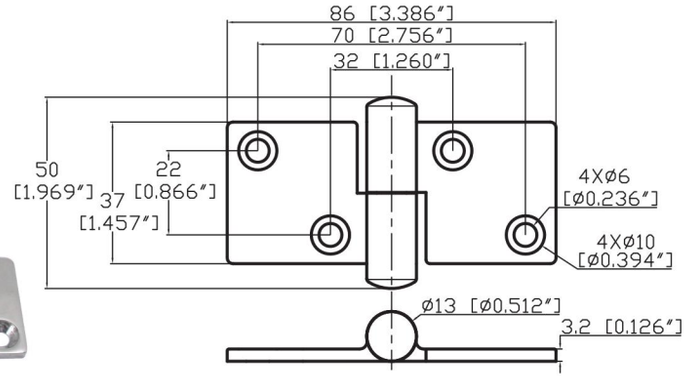

TAKE APART HINGE (RIGHT) - BARREL UP

8822210
37mm X 86mm
1-1/2" X 3-3/8"
Screw Size : #10 or M5.

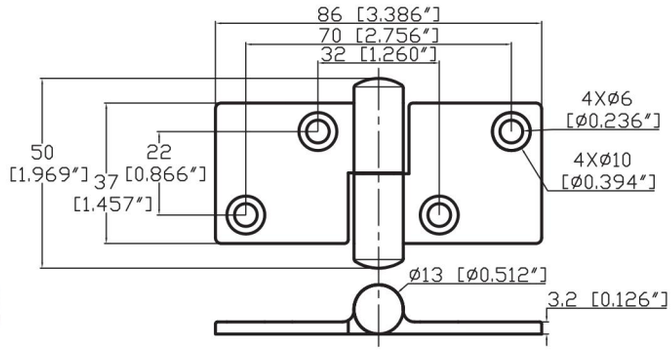

TAKE APART HINGE (LEFT) - BARREL UP

8936648
37mm X 37mm
1-1/2" X 1-1/2"
Screw Size : #8 or M4.

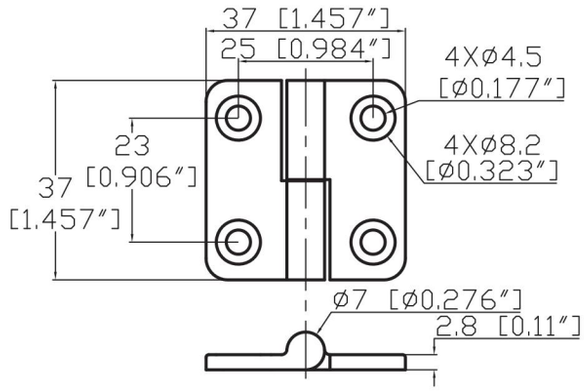

TAKE APART HINGE (RIGHT) - BARREL UP

8936649
37mm X 37mm
1-1/2" X 1-1/2"
Screw Size : #8 or M4.

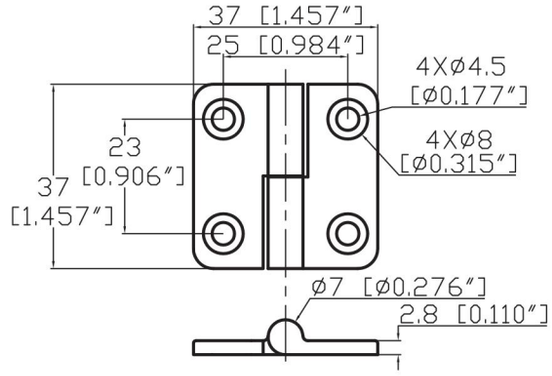

OFFSET HINGE

8936640
37.5mm X 69.5mm
1-1/2" X 2-3/4"
Screw Size : #8 or M4.

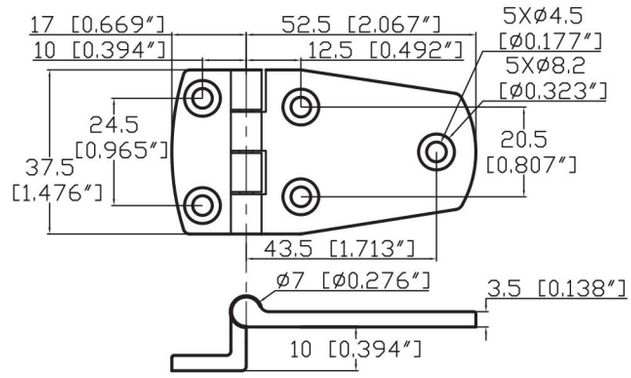

OFFSET HINGE

8936639
37.5mm X 49mm
1-1/2" X 1-15/16"
Screw Size : #8 or M4.

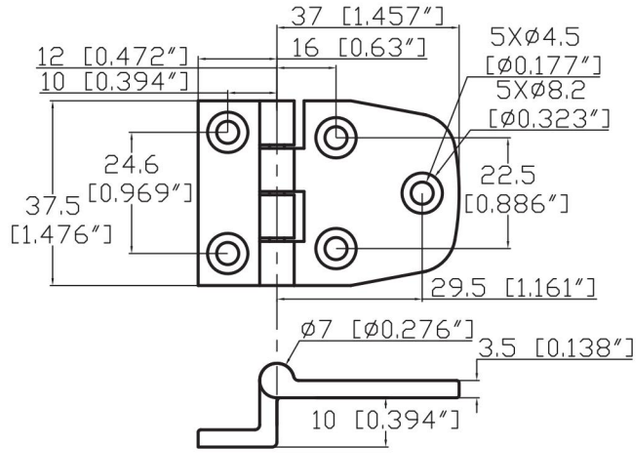

GLASS HINGE

0319294
50.5mm X 102.5mm
2" X 4"
Screw Size : #10-24T.

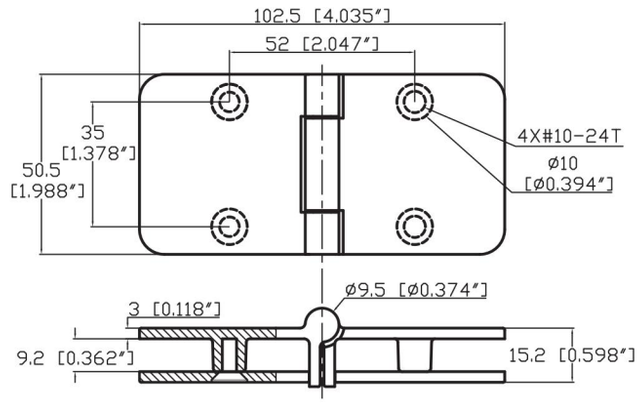

HATCH HINGE W/PIN

8631408
72mm X 69.8mm
2-7/8" X 2-3/4"
Screw Size : #10 or M5.

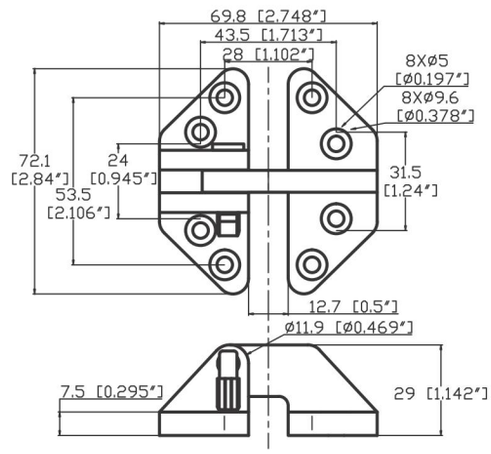

STAMPED HINGE

Stainless Steel 316

- Countersink screw holes.
- Bright polished finish.
- Durability and beauty combined.

STAMPED BUTT HINGE - BARREL UP

9424814
37.2mm X 49mm
1-1/2" X 1-15/16"
Screw Size : #8 or M4.

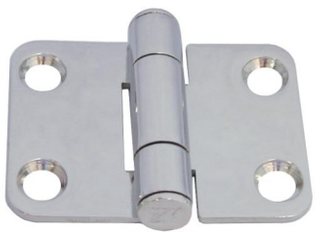

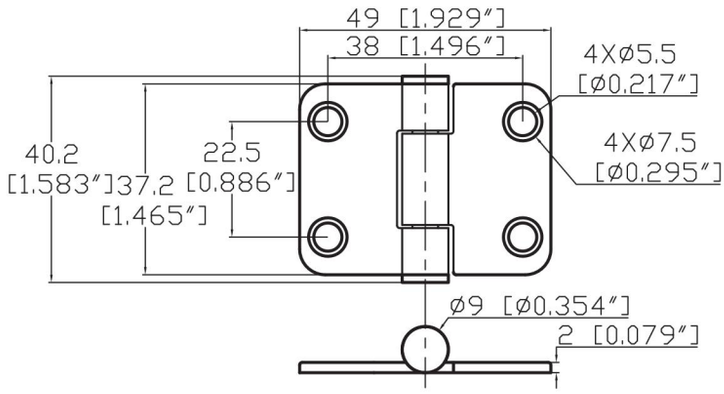

STAMPED BUTT HINGE - BARREL UP

9022301
37mm X 35.7mm
1-1/2" X 1-7/16"
Screw Size : #8 or M4.

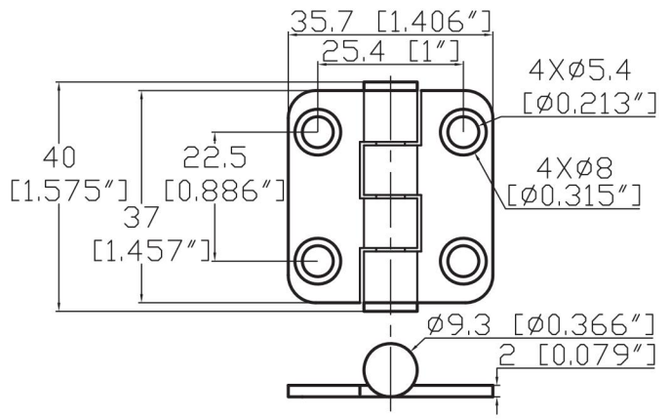

STAMPED BUTT HINGE - BARREL UP

9022322
36.5mm X 66.6mm
1-7/16" X 2-5/8"
Screw Size : #8 or M4.

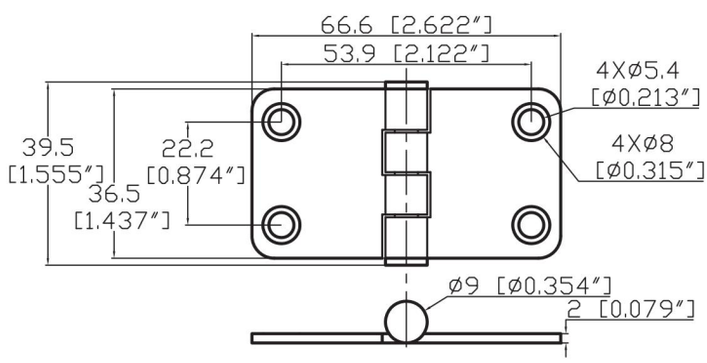

STAMPED BUTT HINGE - BARREL UP

9519862
50.8mm X 50.8mm
2" X 2"
Screw Size : #10 or M5.

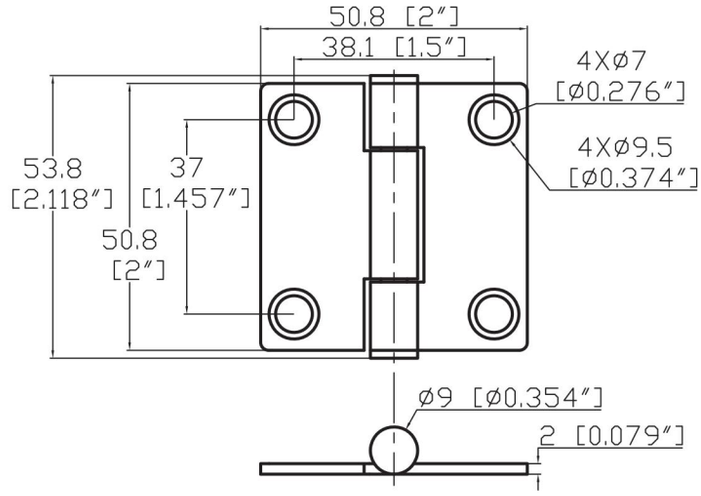

STAMPED HINGE - BARREL DOWN

9519863
50.8mm X 50.8mm
2" X 2"
Screw Size : #10 or M5.

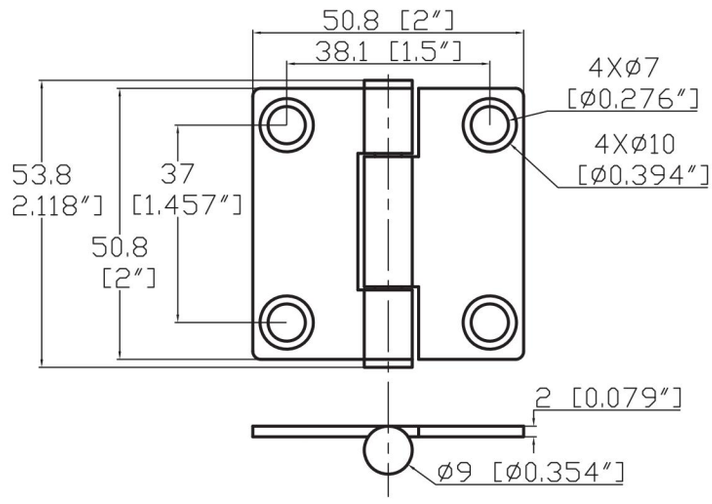

STAMPED HINGE - BARREL UP

9022340
37mm X 76mm
1-1/2" X 3"
Screw Size : #8 or M4.

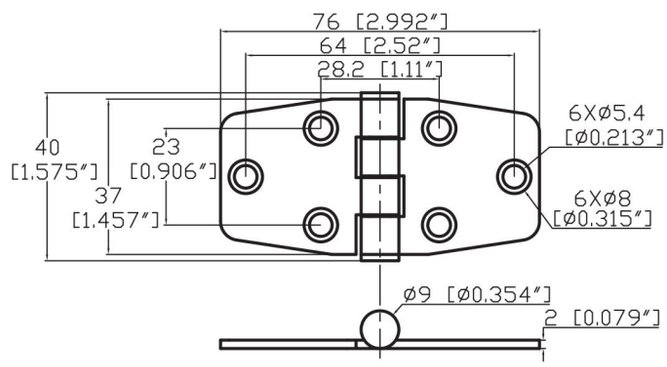

STAMPED HINGE - BARREL UP

9022306
37mm X 76mm
1-1/2" X 3"
Screw Size : #8 or M4.

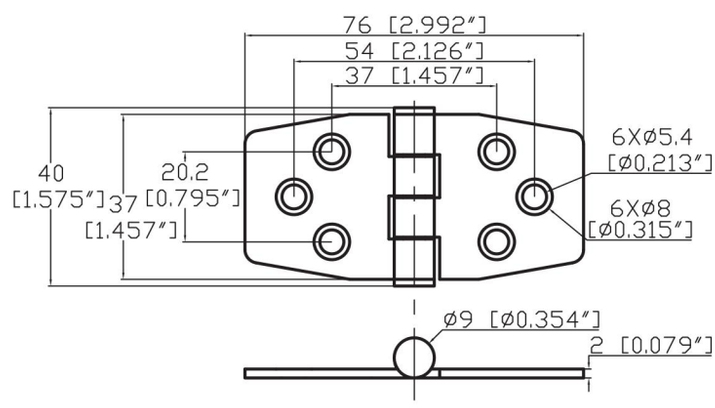

STAMPED FOLDING HINGE - BARREL DOWN

9424843
40mm X 70mm
1-9/16" X 2-3/4"
Screw Size : #10 or M5.

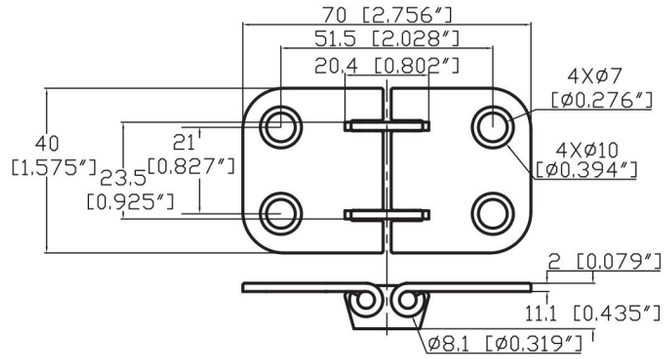

STAMPED FOLDING HINGE - BARREL DOWN

9424844
40mm X 70.5mm
1-9/16" X 2-3/4"
Screw Size : #10 or M5.

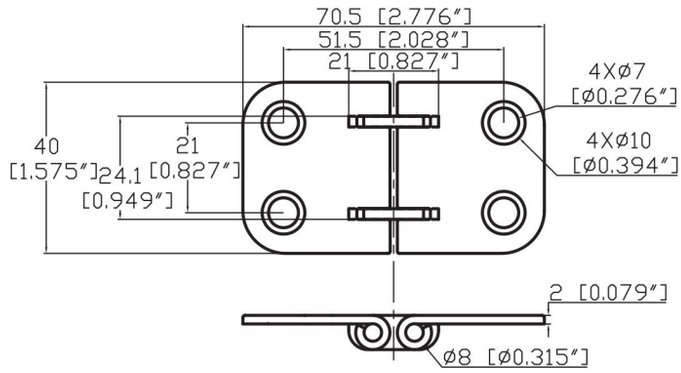

STAMPED HINGE - BARREL UP

9424856
75mm X 76mm
3" X 3"
Screw Size : #10 or M5.

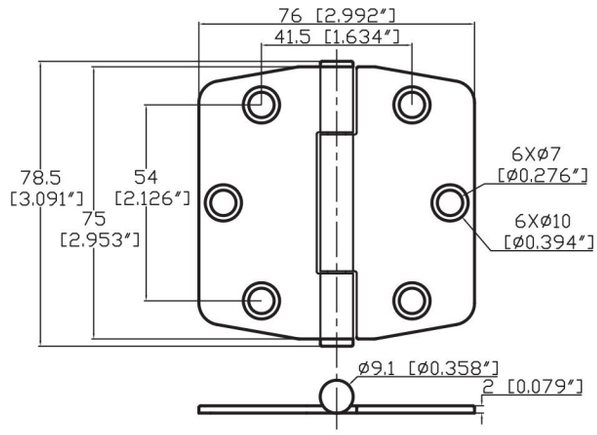

STAMPED HINGE - BARREL UP

9424829
76.5mm X 50mm
3" X 2"
Screw Size : #6 or M3.

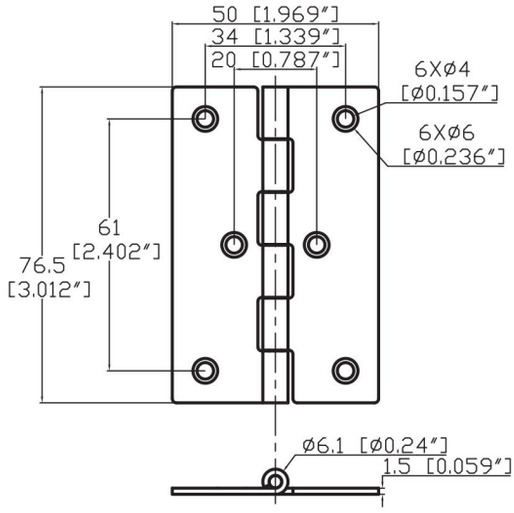

STAMPED HINGE - BARREL UP

9022335
50mm X 35mm
2" X 1-3/8"
Screw Size : #6 or M3.

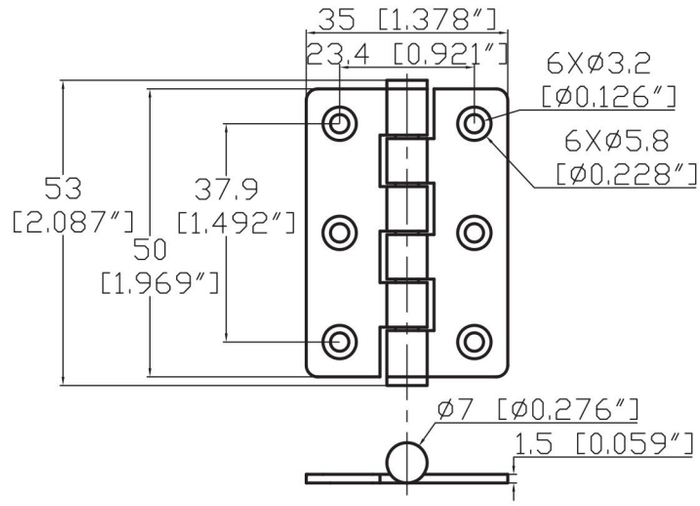

STAMPED HINGE - BARREL UP

9022336
62mm X 40mm
2-7/16" X 1-9/16"
Screw Size : #6 or M3.

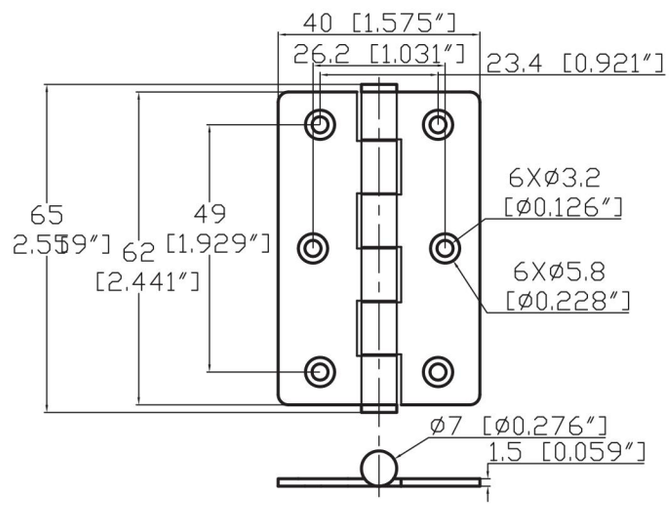

STAMPED HINGE - BARREL UP

9022338
100mm X 55mm
4" X 2-3/16"
Screw Size : #8 or M4.

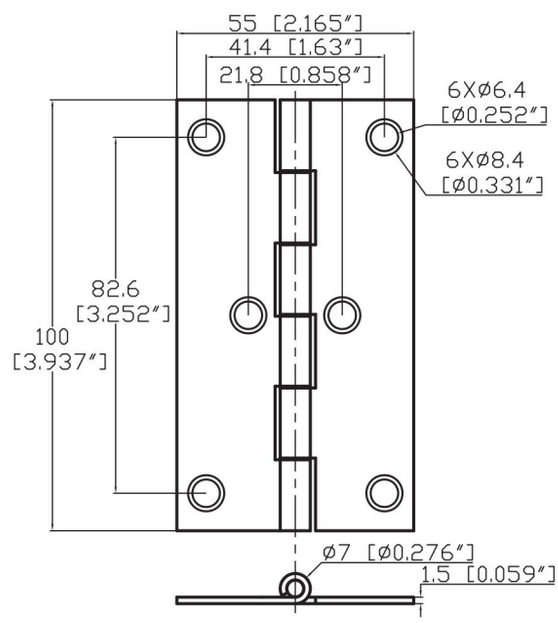

STAMPED HINGE
- BARREL UP

9022303
37mm X 57mm
1-1/2" X 2-1/4"
Screw Size : #8 or M4.

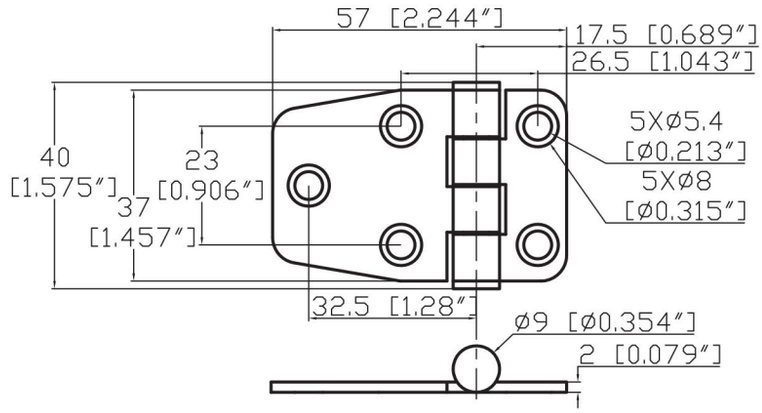

STAMPED HINGE
- BARREL UP

9022321
36.5mm X 67.4mm
1-7/16" X 2-11/16"
Screw Size : #8 or M4.

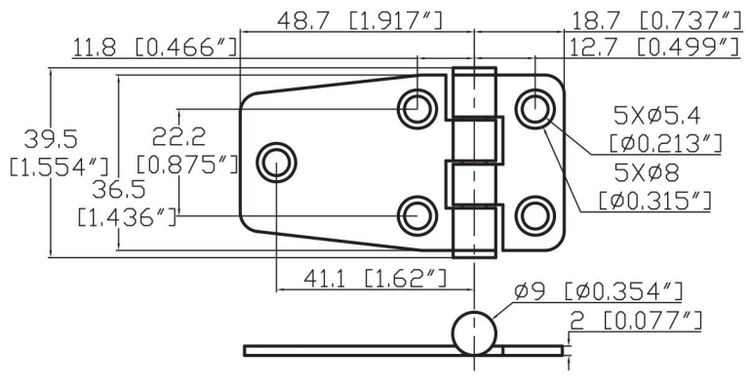

STAMPED HINGE
- BARREL UP

9022326
36.5mm X 86.8mm
1-7/16" X 3-7/16"
Screw Size : #8 or M4.

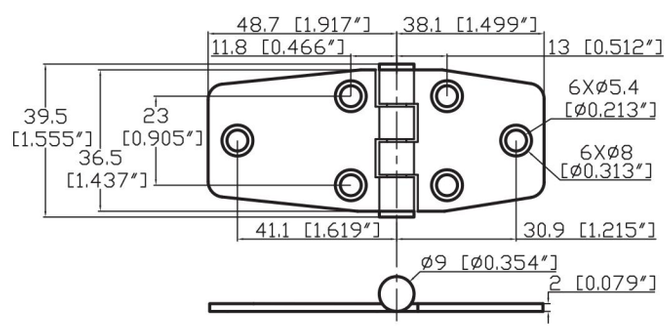

ROUND SIDE HINGE - BARREL UP

0011027
38.1mm X 74mm
1-1/2" X 2-15/16"
Screw Size : #8 or M4.

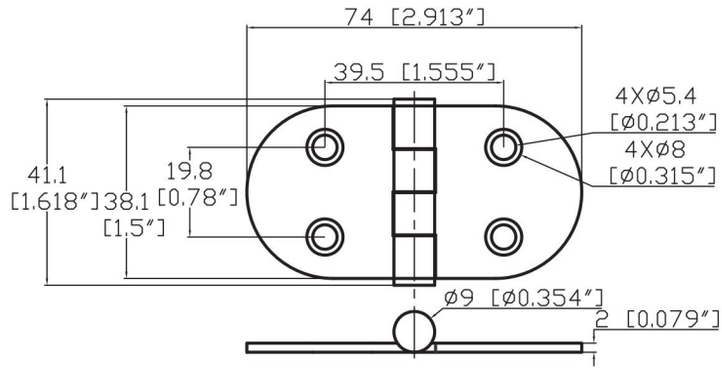

ROUND SIDE HINGE - BARREL UP

0011028
38.1mm X 108.5mm
1-1/2" X 4-1/4"
Screw Size : #8 or M4.

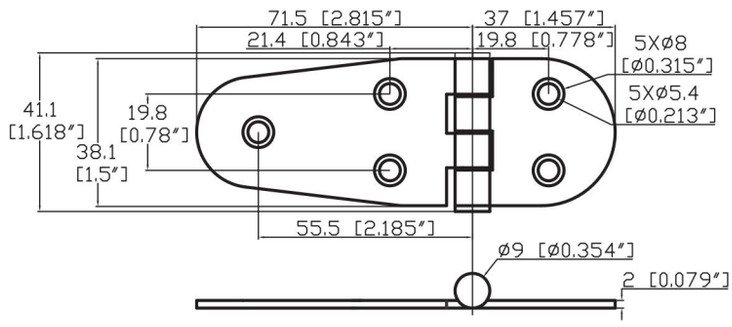

STAMPED HINGE - BARREL UP

0011030
38.1mm X127mm
1-1/2" X 5"
Screw Size : #8 or M4.

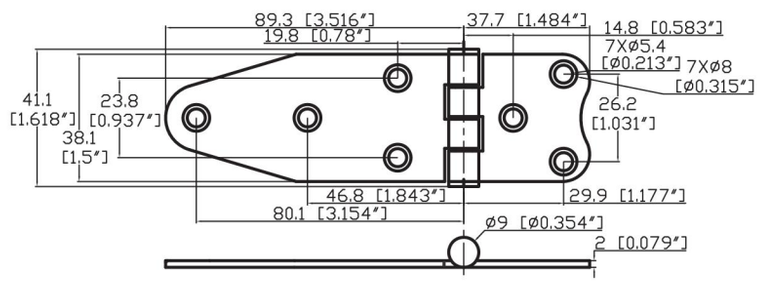

STAMPED HINGE
- BARREL UP

9022310
30mm X 101.6mm
1-3/16" X 4"
Screw Size : #8 or M4.

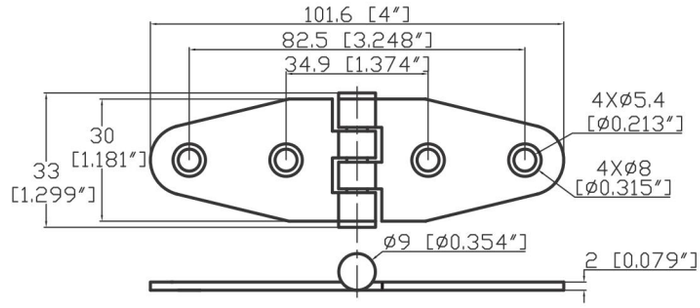

STAMPED HINGE
- BARREL UP

9022311
38.1mm X 143mm
1-1/2" X 5-5/8"
Screw Size : #8 or M4.

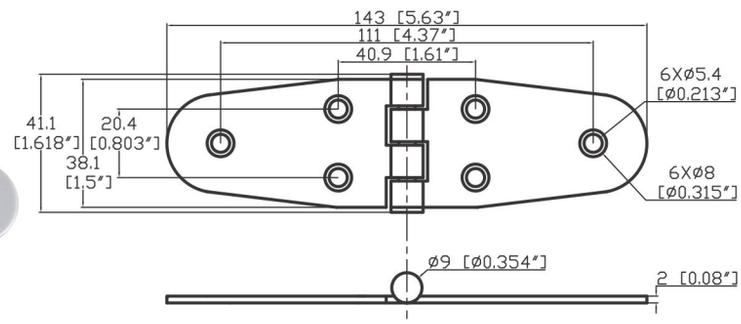

STAMPED HINGE
- BARREL UP
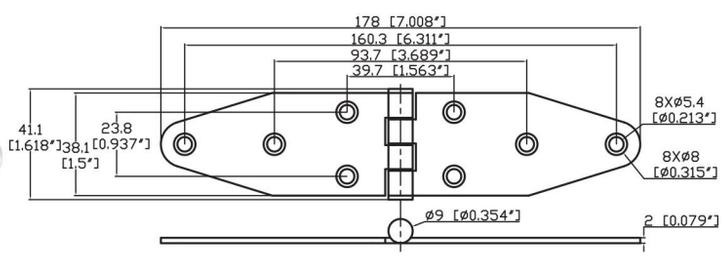
9022315
38.1mm X 178mm
1-1/2" X 7"
Screw Size : #8 or M4.